LAUFEN

REF: H4113921082671



BASE 2.0

Vanity unit, 2 drawers, matches washbasin VAL H810284

COLOUR AND FINISH

267 Wild oak

Adjustable legs

Basin position : Central

Closing and opening system : Soft close drawers

Doors and drawers combination : 2 drawers

Furniture configuration : Drawers

Installation type : Wall-hung

Leg material/finish : Chrome

Leg maximum height (mm) : 263

Material : MDF

Net weight (kg) : 22.2

Organiser boxes : 1

TECHNICAL DRAWINGS

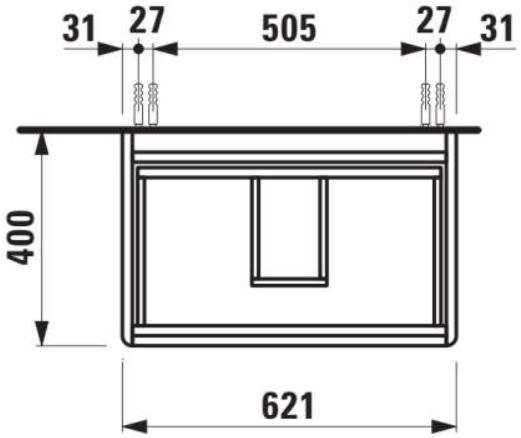

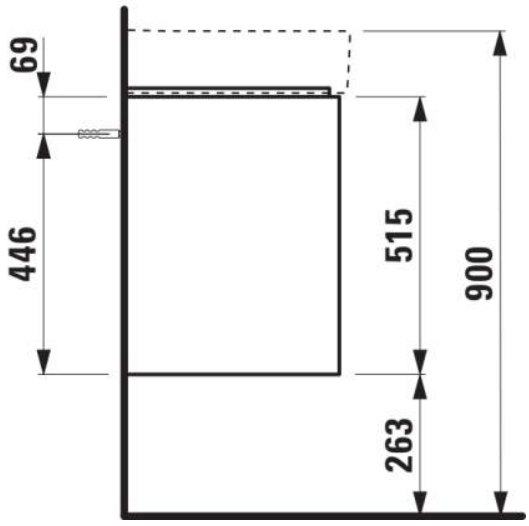

© Copyright 2026, LAUFEN Bathrooms AG | https://www.laufen.com/products/vanity-unit-2drawers-matches-washbasin-val-h810284-H411392108...1?sku=H4113921082671

COMPATIBLE WITH



Washbasin

H810284...1041

© Copyright 2026, LAUFEN Bathrooms AG | https://www.laufen.com/products/vanity-unit-2drawers-matches-washbasin-val-h810284-H411392108...1?sku=H4113921082671

BASE 2.0

Evolving a classic – a subtle restyle to a timeless design, maintaining its signature appeal while enhancing its versatility and puristic aesthetic. Rounded corners, integrated J-type handles and anthracite interiors create a refined, seamless look, while full extension drawers with soft-close and a handy drawer organizer ensure practicality. Available in over 40 colour options, BASE 2.0 is the perfect companion for PRO S and VAL washbasins, offering a solution for any bathroom style.



© Copyright 2026, LAUFEN Bathrooms AG | https://www.laufen.com/products/vanity-unit-2drawers-matches-washbasin-val-h810284-H411392108...1?sku=H4113921082671

BASE 2.0 FURNITURE

Vanity unit
411392



TECHNICAL DATA

Order no.	411392 / 2 drawers
Dimensions (WxHxD)	621 x 515 x 400 mm
Matching for	washbasin Val, order no. 810284
Matching cabinets	Lani, order no. 403701, 403702, 403711, 403712, 403721, 403722
Specification	Body/Front – 19 mm MDF panels, lacquered or PET/PVC furniture foil White matt, White glossy, Traffic grey: Side panels with PET foil (postforming) Front with PET foil and ABS edges Wild oak: Side panels with PVC foil (postforming) Front with PVC foil and ABS edges Specialcolor, Multicolor: Side panels and front lacquered integrated handle in the front 2 full extension drawers, anthracite (soft-close mechanism), incl. organizer
Weight	22,2 kg
Accessories incl.	Drawer organizer, U-shaped, order no. 496113
Accessories excl.	Feet (2 pieces), anodized aluminium, order no. 402990 Towel holder chrome plated or lacquered, order no. 493120 Towel rail, anodized aluminium, order no. 490951 Space saving siphon, order no. 894250

Mounting acc. incl.	Installation set for furniture, order no. 492143
Mounting acc. excl.	Noise protection kit for furniture, order no. 497057
Mounting information	The walls installed on must meet the requirements of the furniture in terms of weight and the supplied fastening elements. If this cannot be guaranteed another method of installation needs to be chosen. For example with feet.
Colours	260 – White matt 261 – White glossy 266 – Traffic grey 267 – Wild oak 990 – Specialcolor lacquered selection 999 – Multicolor lacquered selection
Colours Towel holder	
order no. 493120	004 – Chrome plated 268 – White matt 450 – Black matt
order no. 490951	104 – Aluminium glossy 105 – Aluminium 106 – Aluminium black

TECHNICAL DRAWINGS / S 1 : 20

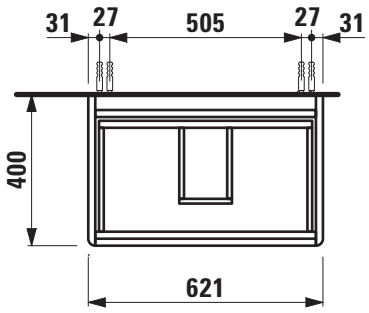

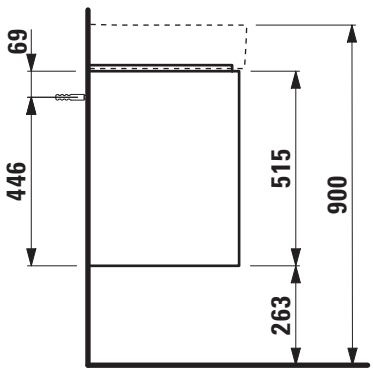

LAUFEN

BASE 2.0 for PRO S-X

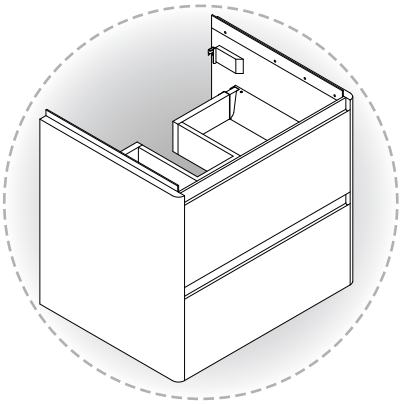

Service

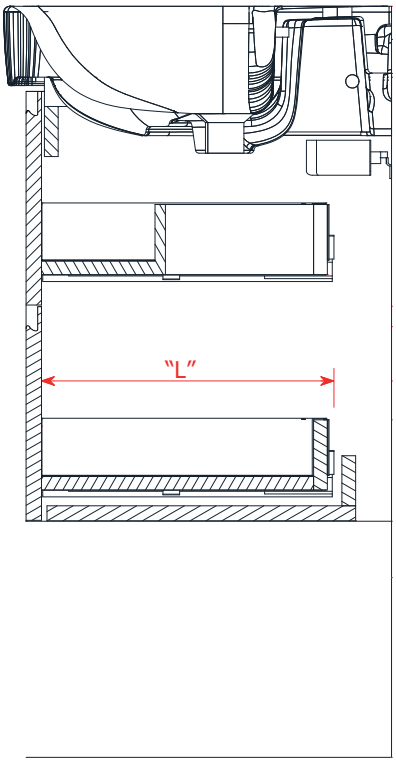

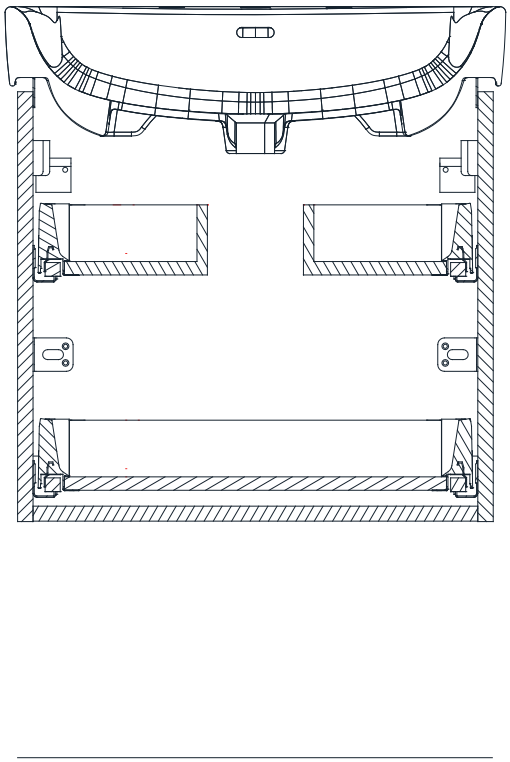

Code vanity unit	"L" in mm	Code runners	Name runners
4.1125.2	270	4.9621.3.000.000.1	Blum Antaro
4.1126.2	270	4.9621.3.000.000.1	Blum Antaro
4.1124.2	350	4.9621.5.000.000.1	Blum Antaro
4.1127.2	350	4.9621.5.000.000.1	Blum Antaro
4.1128.2	350	4.9621.5.000.000.1	Blum Antaro
4.1129.2	350	4.9621.5.000.000.1	Blum Antaro
4.1130.2	350	4.9621.5.000.000.1	Blum Antaro
4.1131.2	350	4.9621.5.000.000.1	Blum Antaro
4.1132.2	350	4.9621.5.000.000.1	Blum Antaro
4.1132.4	350	4.9621.5.000.000.1	Blum Antaro
4.1133.4	350	4.9621.5.000.000.1	Blum Antaro

01/26 4.9864.0.108.000.1

LAUFEN

BASE 2.0 for VAL

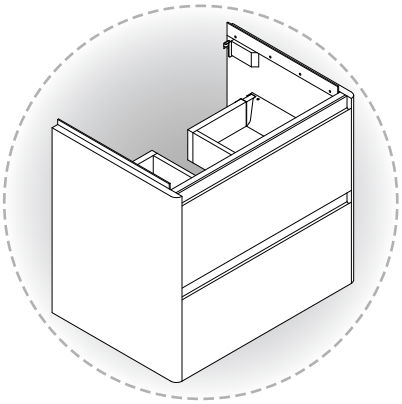

Service

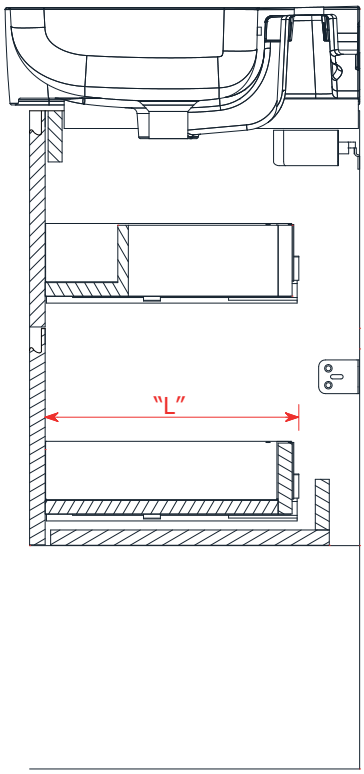

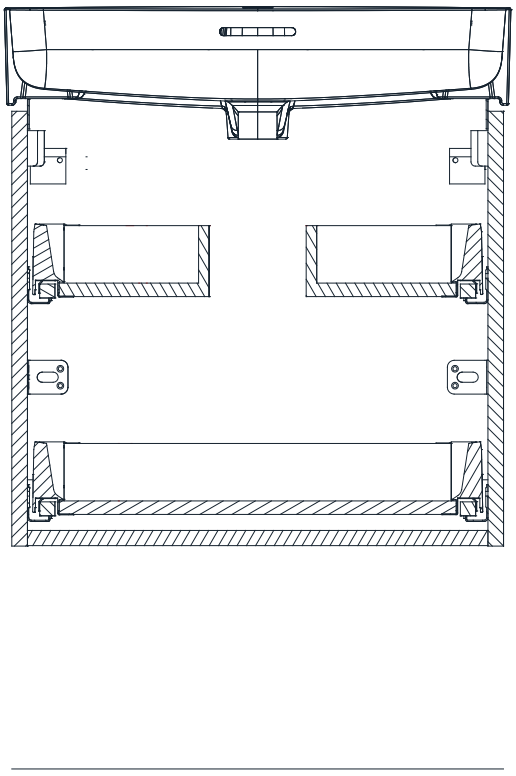

Code vanity unit	"L" in mm	Code runners	Name runners
4.1135.2	300	4.9621.4.000.000.1	Blum Antaro
4.1136.2	300	4.9621.4.000.000.1	Blum Antaro
4.1137.2	300	4.9621.4.000.000.1	Blum Antaro
4.1139.2	300	4.9621.4.000.000.1	Blum Antaro
4.1140.2	300	4.9621.4.000.000.1	Blum Antaro
4.1141.2	300	4.9621.4.000.000.1	Blum Antaro
4.1142.2	300	4.9621.4.000.000.1	Blum Antaro
4.1142.4	300	4.9621.4.000.000.1	Blum Antaro

LAUFEN

REF: H8102840001041



VAL

Washbasin

COLOUR AND FINISH

000 White

OPTIONS

104 - one tap hole, centre

SPECIFICATION TEXT

Charge 104 – 1 centre tap hole

MOUNTING ACCESSORIES EXCLUDED

Mounting set M10 x 140 mm, order no. 89988.2

Bowl length (mm) : 638
Bowl position : Central
Bowl width (mm) : 294
Fastening Distance (inch) : 11.02
Fastening Distance (mm) : 280
Glazed base
Installation type : Vanity, Wall-hung
Internal Shape : Square
Material : Saphirkeramik
Net weight (kg) : 13.1
Number of fixing points : 2
Overflow type : Standard
Shape : Rectangular
Taphole configuration : 1 taphole in the middle

TECHNICAL DRAWINGS

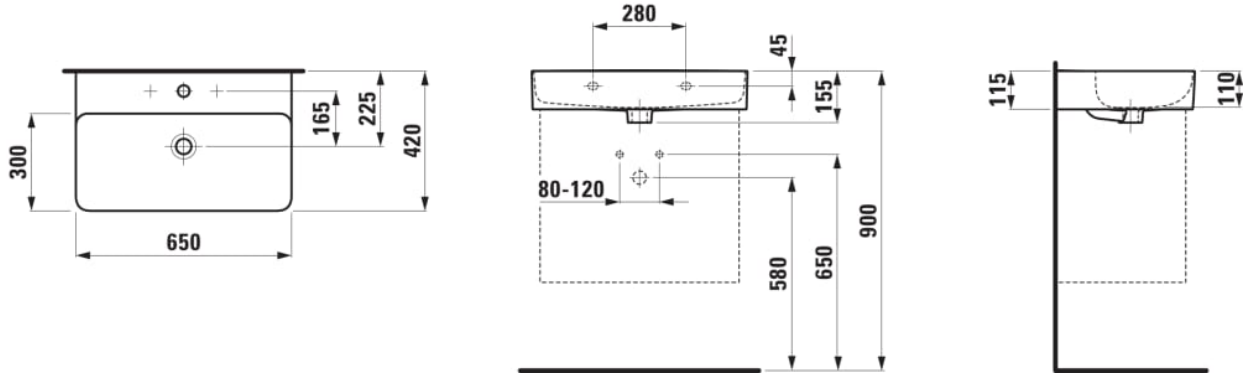

© Copyright 2026, LAUFEN Bathrooms AG | https://www.laufen.com/products/washbasin-H810284...1041?sku=H8102840001041

COMPATIBLE WITH



LANI Towel frame 650 x 380 for washbasin VAL

H386972...0001



Towel holder lateral, right

H382120...0001



Towel holder lateral, left

H382121...0001



Vanity unit, 2 drawers, matches washbasin VAL H810284

H411392108...1



Vanity unit, 2 drawers, matches washbasin VAL H810284

H411612109...1



Vanity unit, 2 drawers, matches washbasin H810284

H410162160...1





© Copyright 2026, LAUFEN Bathrooms AG | https://www.laufen.com/products/washbasin-H810284...1041?sku=H8102840001041





© Copyright 2026, LAUFEN Bathrooms AG | https://www.laufen.com/products/washbasin-H810284...1041?sku=H8102840001041



VAL

Simple architectural lines, extremely narrow edges and finely textured surfaces make the washbasins of VAL by Konstantin Grcic globally unique. Forms and textures not previously possible in sanitary ceramics are realised in an exciting collection which includes washbasins, WC and bidets, bathtubs, faucets and accessories.

© Copyright 2026, LAUFEN Bathrooms AG | https://www.laufen.com/products/washbasin-H810284...1041?sku=H8102840001041

#material_text

saphirkeramik

Saphirkeramik

Saphirkeramik, patented and available on the market is one of the latest, globally significant innovation from LAUFEN. This revolutionary, ceramic material reaches its exceptional hardness blended with corundum, a colourless mineral, which is a component of sapphires. This gives Saphirkeramik a flexural strength equal to that of steel. Yet it has the potential to be wafer-thin, giving designers almost infinite freedom to experiment – and tear up the rulebook of bathroom design.

© Copyright 2026, LAUFEN Bathrooms AG | https://www.laufen.com/products/washbasin-H810284...1041?sku=H8102840001041

SET VAL

Countertop basin
81028.4



TECHNICAL DATA

Order no.	81028.4
Certified to	EN 31
Dimensions	650 x 420 mm
Inside dimensions of the basin	638 x 294 mm
Basin capacity	exact specification not yet available
Specification	Charge 104 – 1 centre tap hole
Special specification	Charge 108 – 3 tap holes Charge 109 – without tap holes Charge 136 – 3 tap holes, distance 8 inches
Weight	13,5 kg
Mounting acc. excl.	Mounting set M10 x 140 mm, order no. 89988.2
Colours	see colour table

SPECIFICATION TEXT

Countertop basin Laufen-VAL, SaphirKeramik
EN 31
dimensions 650 x 420 mm
1 centre tap hole
Special feature: overflow channel glazed
Further options / accessories: Surface refinement LCC (only white), 3 tap holes, without tap holes, 3 tap holes distance 8 inches, bathtubs
Order no. 81028.4

TECHNICAL DRAWINGS / S 1 : 20

