LAUFEN

REF: H4112421082601



BASE 2.0

Vanity unit, 2 drawers, matches washbasin PRO S H810962 / PRO X 810862

COLOUR AND FINISH

260 White Matt

Adjustable legs

Basin position : Central

Closing and opening system : Soft close drawers

Doors and drawers combination : 2 drawers

Furniture configuration : Drawers

Installation type : Wall-hung

Leg material/finish : Chrome

Leg maximum height (mm) : 283

Material : MDF

Net weight (kg) : 22.2

Organiser boxes : 1

TECHNICAL DRAWINGS

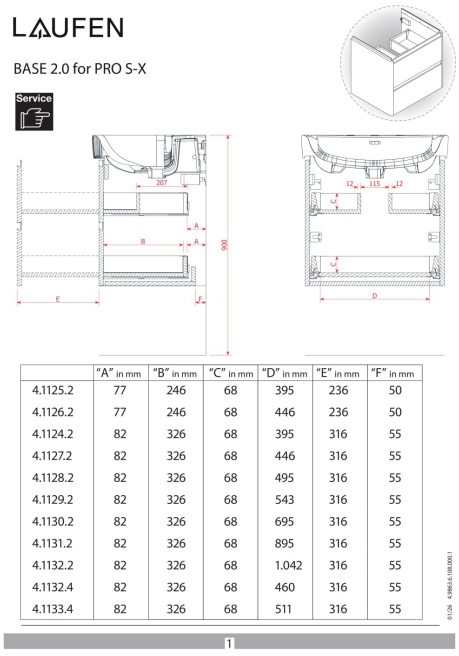

	"A" in mm	"B" in mm	"C" in mm	"D" in mm	"E" in mm	"F" in mm
4.1125.2	77	246	68	395	236	50
4.1126.2	77	246	68	446	236	50
4.1124.2	82	326	68	395	316	55
4.1127.2	82	326	68	446	316	55
4.1128.2	82	326	68	495	316	55
4.1129.2	82	326	68	543	316	55
4.1130.2	82	326	68	695	316	55
4.1131.2	82	326	68	895	316	55
4.1132.2	82	326	68	1.042	316	55
4.1132.4	82	326	68	460	316	55
4.1133.4	82	326	68	511	316	55

© Copyright 2026, LAUFEN Bathrooms AG | https://www.laufen.com/products/vanity-unit-2drawers-matches-washbasin-pro-s-h810962pro-x-810862-H411242108...1?sku=H4112421082601

COMPATIBLE WITH



Washbasin

H810862...1041



Washbasin

H810862...1081



Washbasin

H810862...1091



Washbasin

H810862...1421



Washbasin

H810862...1561



Washbasin

H810962...1041





© Copyright 2026, LAUFEN Bathrooms AG | https://www.laufen.com/products/vanity-unit-2drawers-matches-washbasin-pro-s-h810962pro-x-810862-H411242108...1?sku=H4112421082601













© Copyright 2026, LAUFEN Bathrooms AG | https://www.laufen.com/products/vanity-unit-2drawers-matches-washbasin-pro-s-h810962pro-x-810862-H411242108...1?sku=H4112421082601











© Copyright 2026, LAUFEN Bathrooms AG | https://www.laufen.com/products/vanity-unit-2drawers-matches-washbasin-pro-s-h810962pro-x-810862-H411242108...1?sku=H4112421082601

BASE 2.0

Evolving a classic – a subtle restyle to a timeless design, maintaining its signature appeal while enhancing its versatility and puristic aesthetic. Rounded corners, integrated J-type handles and anthracite interiors create a refined, seamless look, while full extension drawers with soft-close and a handy drawer organizer ensure practicality. Available in over 40 colour options, BASE 2.0 is the perfect companion for PRO S and VAL washbasins, offering a solution for any bathroom style.



© Copyright 2026, LAUFEN Bathrooms AG | https://www.laufen.com/products/vanity-unit-2drawers-matches-washbasin-pro-s-h810962pro-x-810862-H411242108...1?sku=H4112421082601

BASE 2.0 FURNITURE

Vanity unit
411242



TECHNICAL DATA

Order no.	411242 / 2 drawers
Dimensions (WxHxD)	521 x 515 x 446 mm
Matching for	washbasin Laufen Pro S, order no. 810962, Pro X, order no. 810862
Matching cabinets	Lani, order no. 403701, 403702, 403711, 403712, 403721, 403722
Specification	Body/Front – 19 mm MDF panels, lacquered or PET/PVC furniture foil White matt, White glossy, Traffic grey: Side panels with PET foil (postforming) Front with PET foil and ABS edges Wild oak: Side panels with PVC foil (postforming) Front with PVC foil and ABS edges Specialcolor, Multicolor: Side panels and front lacquered integrated handle in the front 2 full extension drawers, anthracite (soft-close mechanism), incl. organizer
Weight	22,2 kg
Accessories incl.	Drawer organizer, U-shaped, order no. 496113
Accessories excl.	Feet (2 pieces), anodized aluminium, order no. 402991 Towel holder chrome plated or lacquered, order no. 493120 Towel rail, anodized aluminium, order no. 490951 Space saving siphon, order no. 894250
Mounting acc. incl.	Installation set for furniture, order no. 492143
Mounting acc. excl.	Noise protection kit for furniture, order no. 497057
Mounting information	The walls installed on must meet the requirements of the furniture in terms of weight and the supplied fastening elements. If this cannot be guaranteed another method of installation needs to be chosen. For example with feet.
Colours	260 – White matt 261 – White glossy 266 – Traffic grey 267 – Wild oak 990 – Specialcolor lacquered selection 999 – Multicolor lacquered selection
Colours Towel holder	
order no. 493120	004 – Chrome plated 268 – White matt 450 – Black matt
order no. 490951	104 – Aluminium glossy 105 – Aluminium 106 – Aluminium black

TECHNICAL DRAWINGS / S 1 : 20

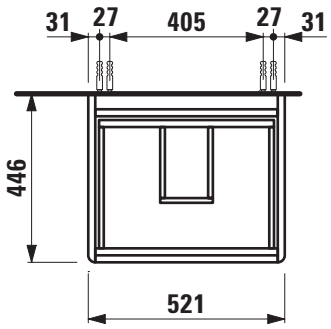

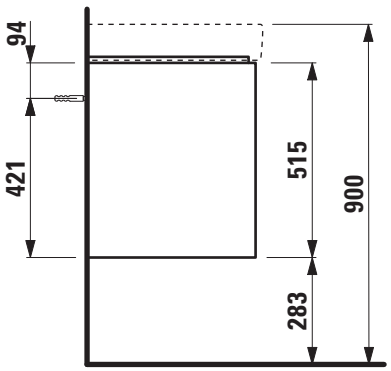

LAUFEN

BASE 2.0 for PRO S-X

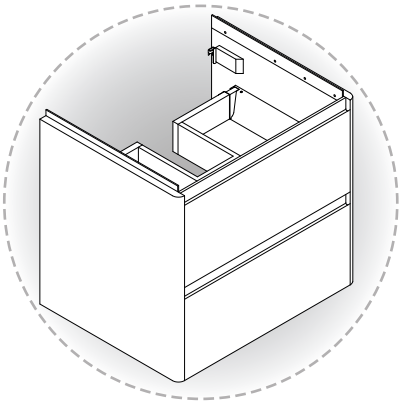

Service

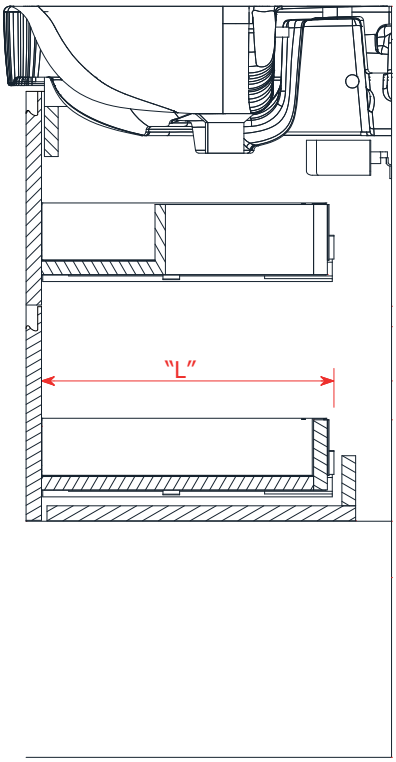

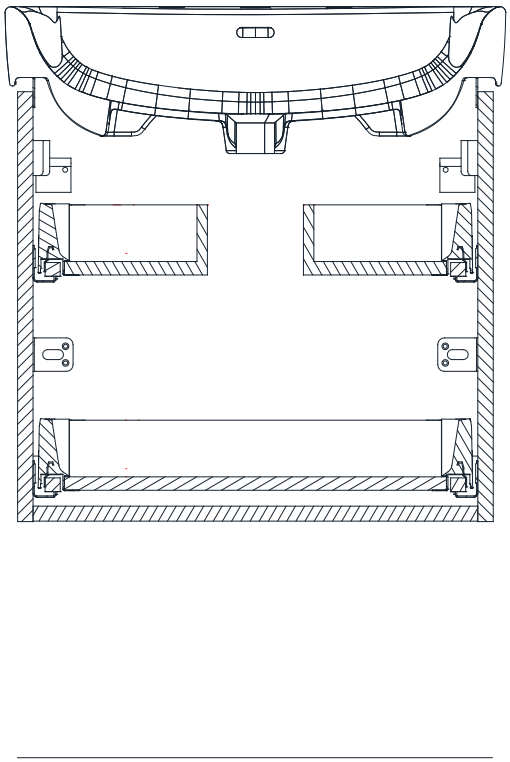

Code vanity unit	"L" in mm	Code runners	Name runners
4.1125.2	270	4.9621.3.000.000.1	Blum Antaro
4.1126.2	270	4.9621.3.000.000.1	Blum Antaro
4.1124.2	350	4.9621.5.000.000.1	Blum Antaro
4.1127.2	350	4.9621.5.000.000.1	Blum Antaro
4.1128.2	350	4.9621.5.000.000.1	Blum Antaro
4.1129.2	350	4.9621.5.000.000.1	Blum Antaro
4.1130.2	350	4.9621.5.000.000.1	Blum Antaro
4.1131.2	350	4.9621.5.000.000.1	Blum Antaro
4.1132.2	350	4.9621.5.000.000.1	Blum Antaro
4.1132.4	350	4.9621.5.000.000.1	Blum Antaro
4.1133.4	350	4.9621.5.000.000.1	Blum Antaro

01/26 4.9864.0.108.000.1

LAUFEN

BASE 2.0 for VAL

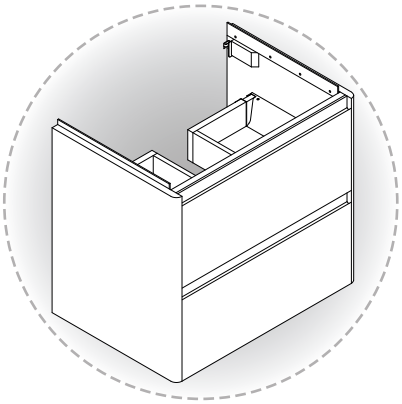

Service

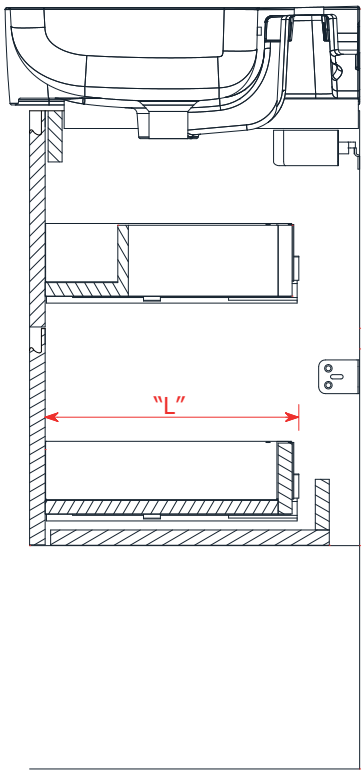

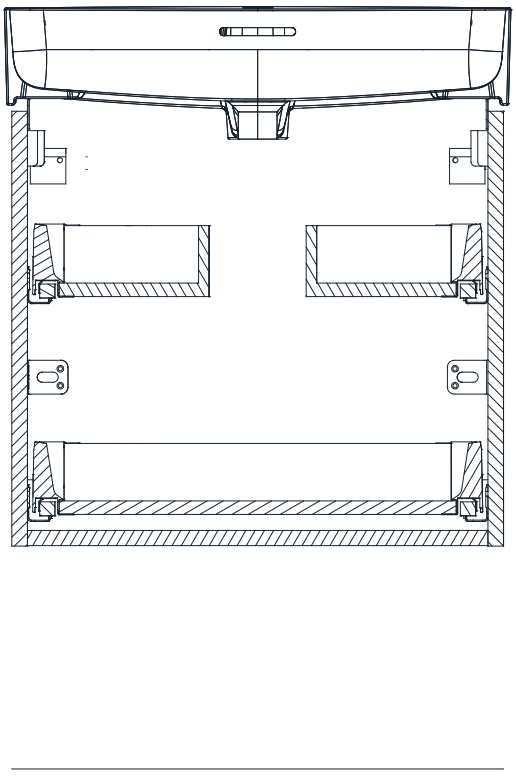

Code vanity unit	"L" in mm	Code runners	Name runners
4.1135.2	300	4.9621.4.000.000.1	Blum Antaro
4.1136.2	300	4.9621.4.000.000.1	Blum Antaro
4.1137.2	300	4.9621.4.000.000.1	Blum Antaro
4.1139.2	300	4.9621.4.000.000.1	Blum Antaro
4.1140.2	300	4.9621.4.000.000.1	Blum Antaro
4.1141.2	300	4.9621.4.000.000.1	Blum Antaro
4.1142.2	300	4.9621.4.000.000.1	Blum Antaro
4.1142.4	300	4.9621.4.000.000.1	Blum Antaro

LAUFEN

REF: H8108620001041



PRO X

Washbasin

COLOUR AND FINISH

000 White

OPTIONS

104 - one tap hole, centre

SPECIFICATION TEXT

Countertop basin Laufen-PRO X, sanitary ceramic EN 31 dimensions 550 x 465 mm 1 centre tap hole
Special feature: overflow channel glazed
Further options / accessories: Surface refinement LCC (only white), without tap holes, 3 tap holes with overflow, without tap hole/overflow and open drain, 1 tap hole/without overflow and open drain, furniture
Order no. H810862

MOUNTING ACCESSORIES EXCLUDED

Mounting set M10 x 140 mm, order no. H899882

Bowl position : Central
Fastening Distance (inch) : 11.02
Fastening Distance (mm) : 280
Fixing kit : Not included
Glazed base
Installation type : Vanity, Wall-hung
Internal Shape : Rectangular
Material : Ceramics
Net weight (kg) : 14.5
Number of fixing points : 2
Overflow type : Standard
Plug and Waste : Not included
Shape : Rectangular
Taphole configuration : 1 taphole in the middle
Waste : Not included

© Copyright 2026, LAUFEN Bathrooms AG | https://www.laufen.com/products/washbasin-H810862...1041?sku=H8108620001041

TECHNICAL DRAWINGS

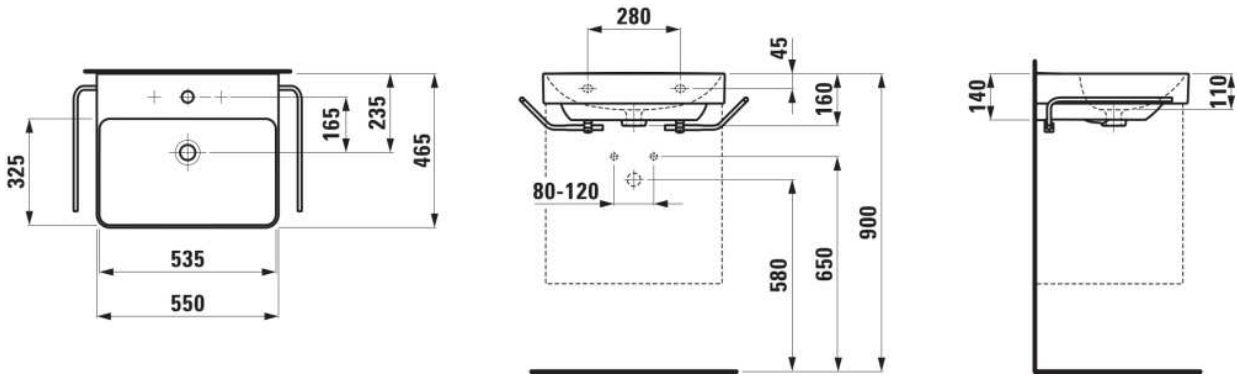

© Copyright 2026, LAUFEN Bathrooms AG | https://www.laufen.com/products/washbasin-H810862...1041?sku=H8108620001041

COMPATIBLE WITH



LANI Towel frame 550 x 420 for washbasins MEDA, LUA, LAUFEN PRO S

H386960...0001



Towel holder lateral, right

H382122...0001



Towel holder lateral, left

H382123...0001



Towel holder Reling for washbasins 550 mm

H381122...0001



Vanity unit, 2 drawers, matches washbasin PRO S H810962 / PRO X 810862

H411242108...1



Vanity unit, 2 drawers, matches washbasin PRO S H810962 / PRO X 810862

H411462109...1





© Copyright 2026, LAUFEN Bathrooms AG | https://www.laufen.com/products/washbasin-H810862...1041?sku=H8108620001041









© Copyright 2026, LAUFEN Bathrooms AG | https://www.laufen.com/products/washbasin-H810862...1041?sku=H8108620001041



PRO X

Marking the third generation of this highly successful collection, PRO X integrates timeless aesthetics with cutting-edge technology to deliver maximum investment security. Designed to meet the needs of private homes, hospitality projects, and public spaces, it offers a versatile and contemporary solution for modern bathrooms.

© Copyright 2026, LAUFEN Bathrooms AG | https://www.laufen.com/products/washbasin-H810862...1041?sku=H8108620001041

SET PRO X

Countertop basin
81086.2



TECHNICAL DATA

Order no.	81086.2
Certified to	EN 31
Dimensions	550 x 465 mm
Inside dimensions of the basin	535 x 325 mm
Basin capacity	6.4 litre (up to bottom line of the overflow)
Specification	Charge 104 – 1 centre tap hole
Special specification	Charge 108 – 3 tap holes Charge 109 – without tap holes Charge 142 – without tap hole, without overflow and without open drain Charge 156 – 1 centre tap hole, without overflow and without open drain
Weight	14,7 kg

Accessories excl.	Towel rail 475 mm, order no. 38112.2 Towel holder right, order no. 38212.2 Towel holder left, order no. 38212.3 Towel frame 550 mm, order no. 38696.0
Mounting acc. excl.	Mounting set M10 x 140 mm, order no. 89988.2
Colours	see colour table

SPECIFICATION TEXT

Countertop basin Laufen-PRO X, sanitary ceramic
EN 31
dimensions 550 x 465 mm
1 centre tap hole
Special feature: overflow channel glazed
Further options / accessories: Surface refinement LCC (only white), without tap holes, 3 tap holes with overflow, without tap hole/overflow and open drain, 1 tap hole/without overflow and open drain, furniture
Order no. 81086.2

TECHNICAL DRAWINGS / S 1 : 20

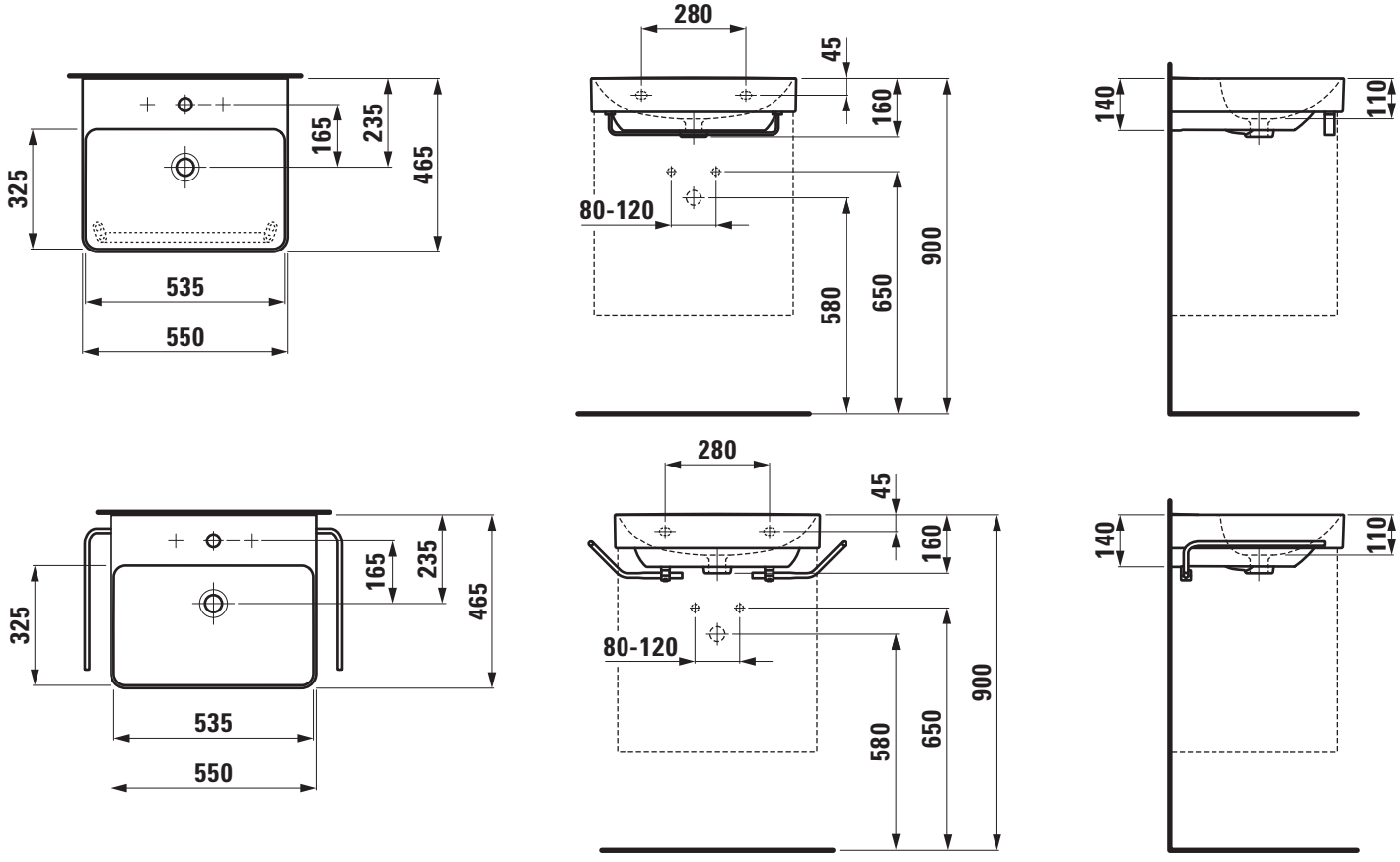

LAUFEN