T-3000





Roca



P bar




10 Max



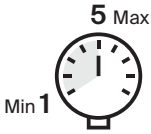
5 Max
Min 1


3
1





T °C




80 Max


65
50



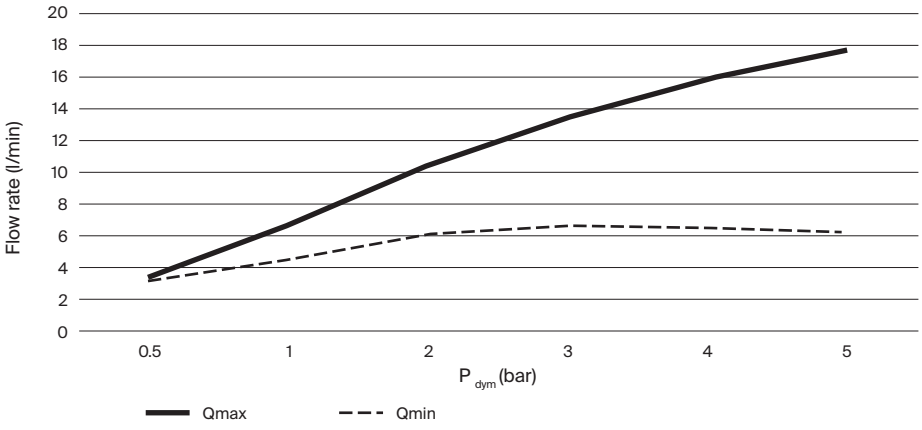
20
18
16
14
12
10
8
6
4
2
0
Flow rate (l/min)
0.5
1
2
3
4
5
P dym (bar)
Qmax
Qmin

A5A2I09..0

(mm)



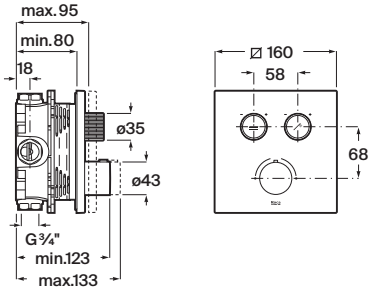

A5A2K09..0

(mm)



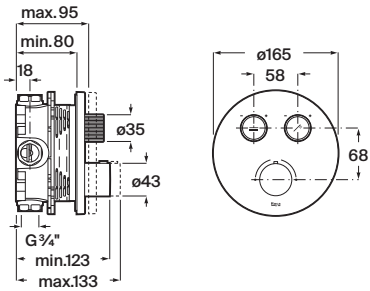



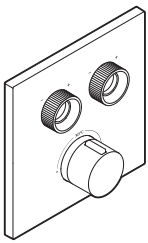

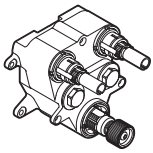

x1

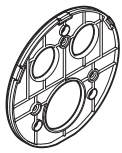

x1

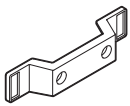

x1

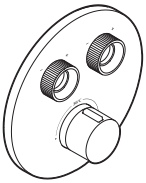





x1





x1



x4

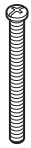

x3

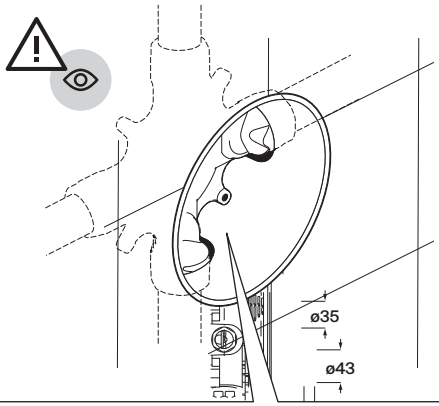

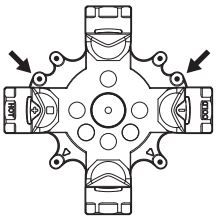

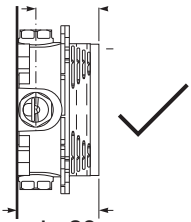

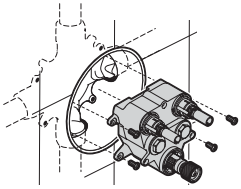

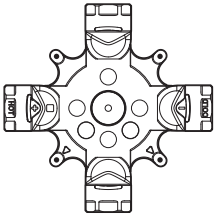

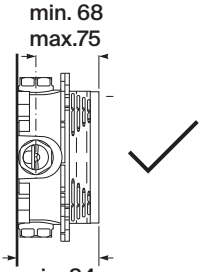

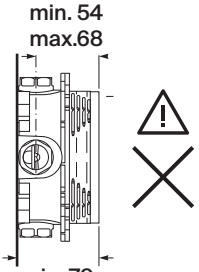



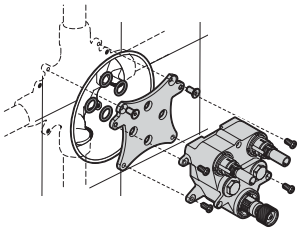

Instalación no es posible
Installation is not possible

1.

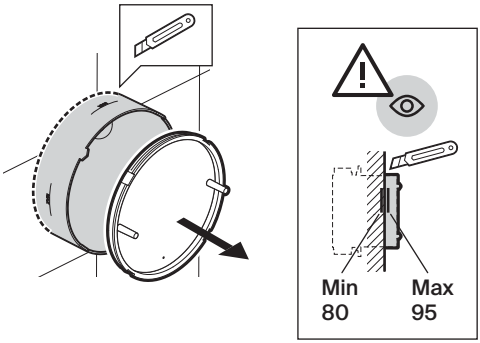

2.

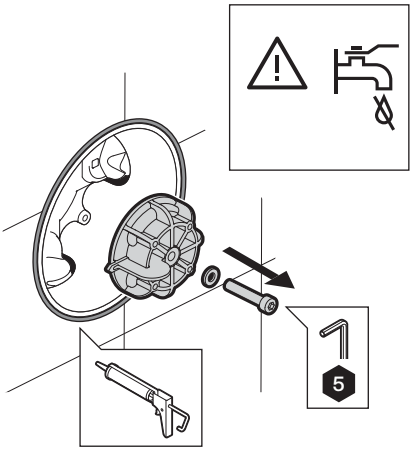

3.

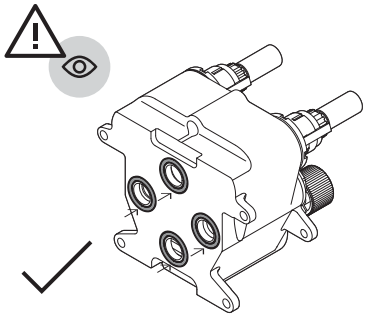

4.

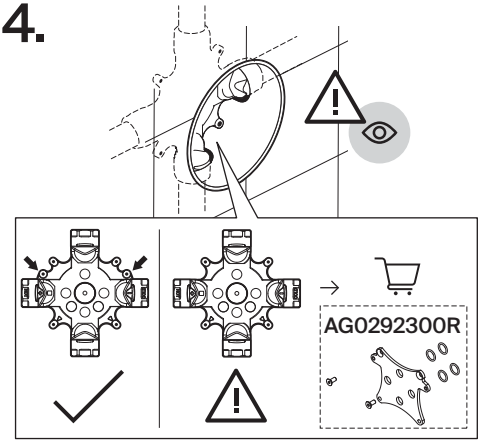

5.a

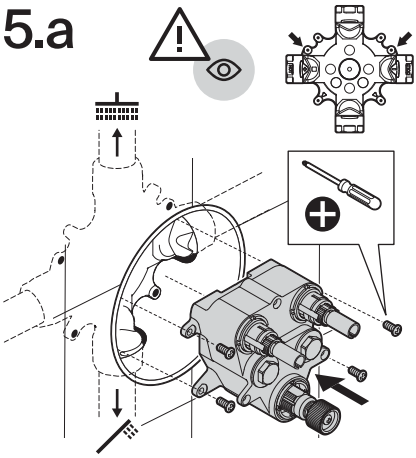

5.b

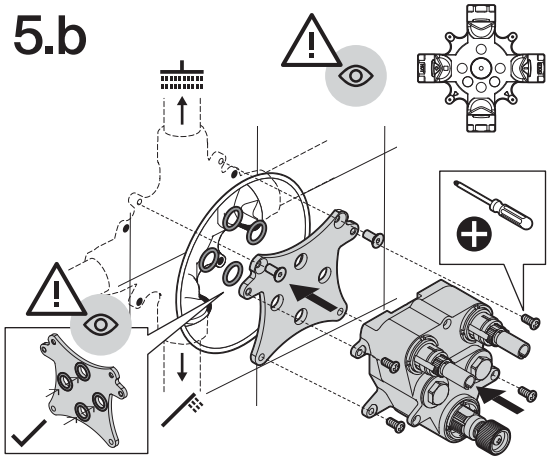

7.

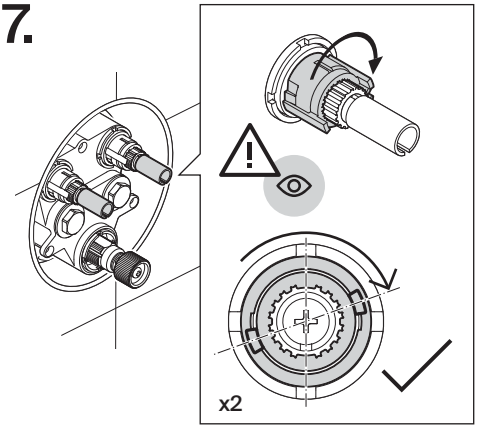

8.

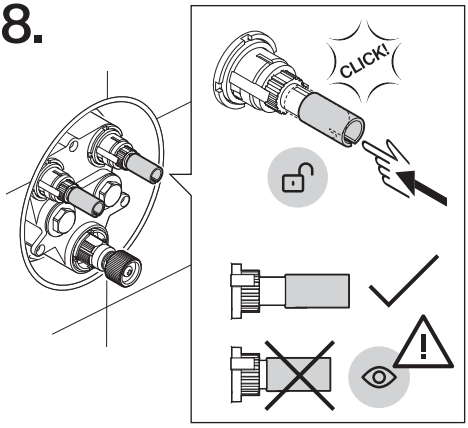

9.

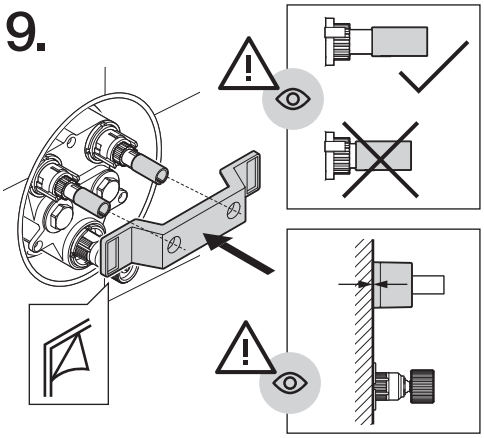

10.

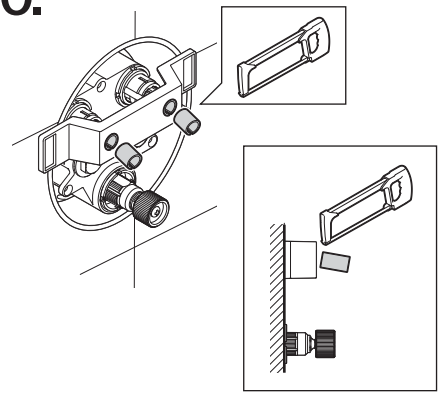

11.

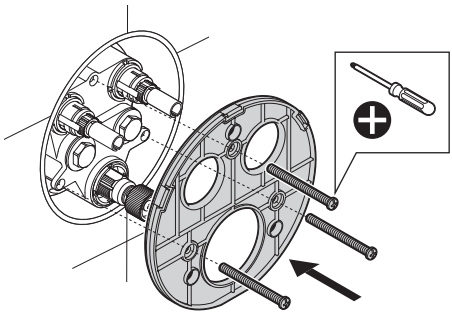

12.

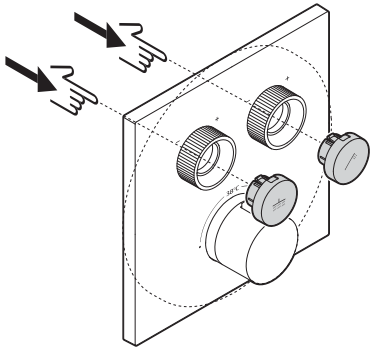

13.

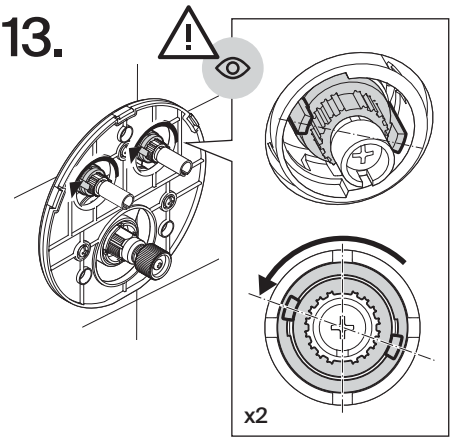

14.

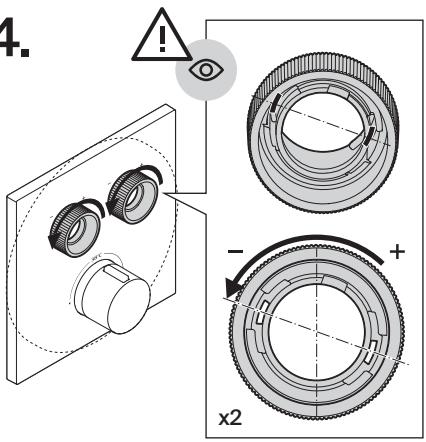

15.

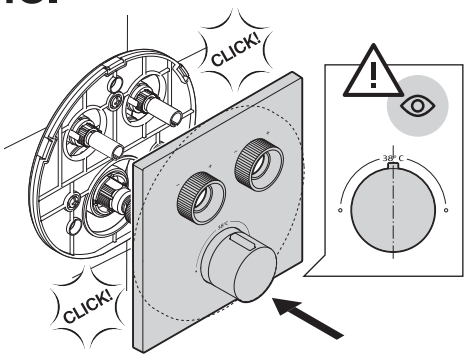

16.

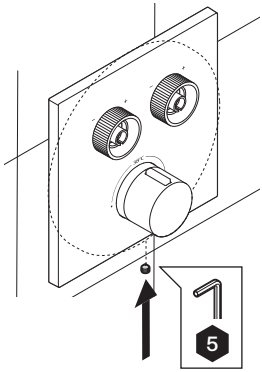

17.

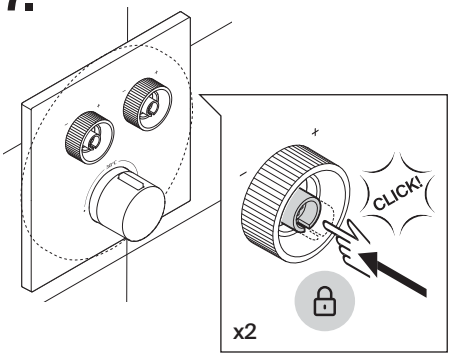

18.

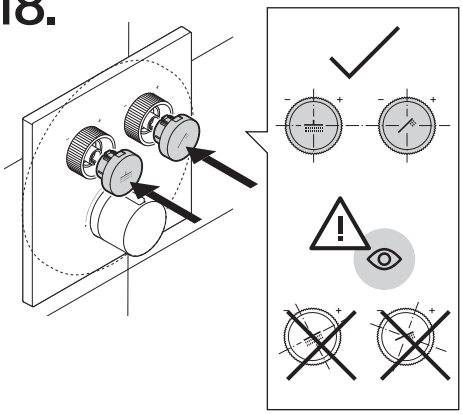

On / Off

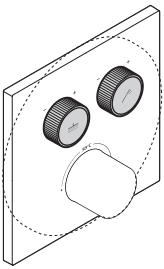

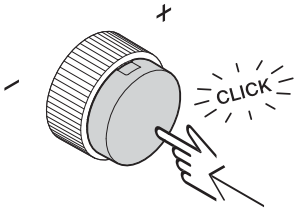

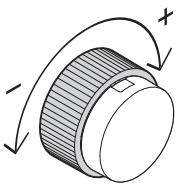

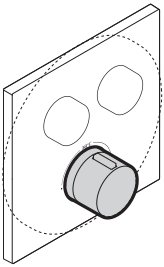

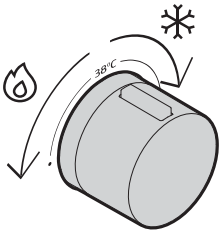

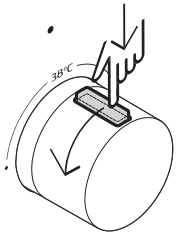

1

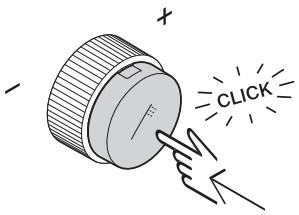

2

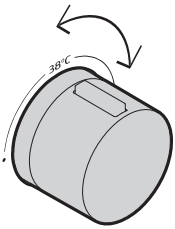

3

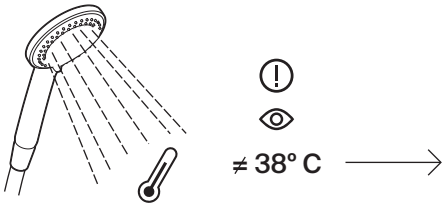

4

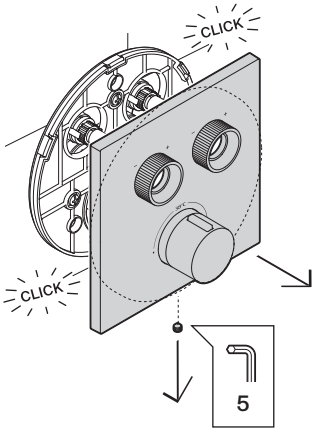

5

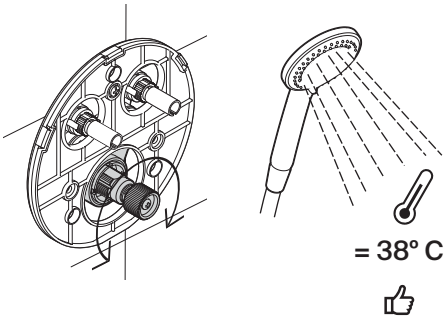

6

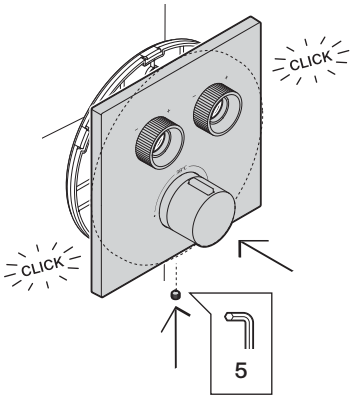

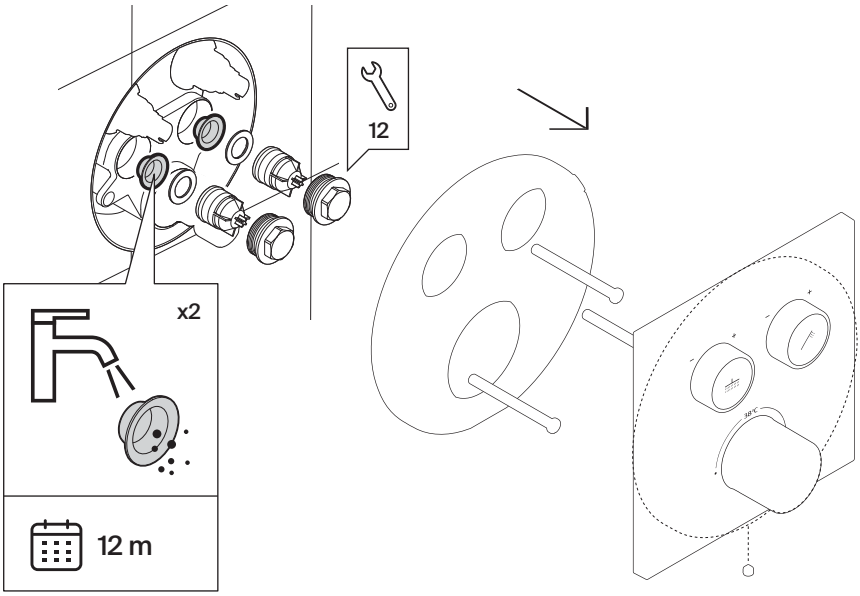
12
x2
12 m


HARD
SOFT





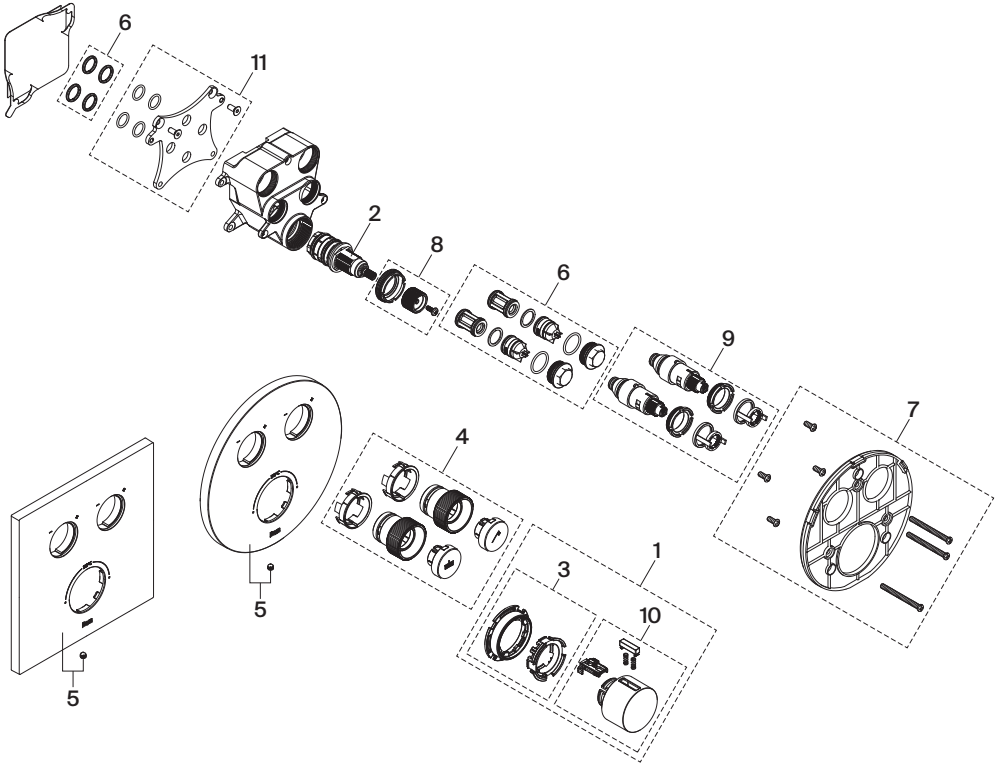

1	AG02629..R	5	AG02632..R	ROUND	8 AG0263500R
2	AG0131603R		AG02639..R	SQUARE	9 AG0263600R
3	AG02630..R	6	AG0263300R		10 AG02637..R
4	AG02631..R	7	AG0263400R		11 AG0292300R

CÓDIGO / CODE
0000000..0

ACABADO / FINISH
→ **www.roca.com**

A533089407-ac

Roca Sanitario, S.A.U.
Avda Diagonal, 513
08029 Barcelona - España
roca.com

ROCA BOX UNIVERSAL
SINGLE LEVER MIXER

L-90		THESIS		ESMAI	
					
A5A2B01	A5A0B01	A5A2B50	A5A0B50	A5A2B31	A5A0B31

ATLAS		INSIGNIA		LANTA	
					
A5A2B90	A5A0B90	A5A2B3A	A5A0B3A	A5A2B11	A5A0B11

M2		NAIA		LOGICA	
					
A5A2B68	A5A0B68	A5A2B96	A5A0B96	A5A2B27	A5A0B27

[mm]

L90

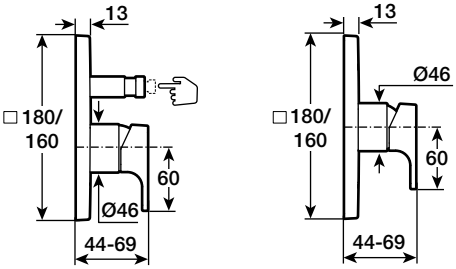

THESIS

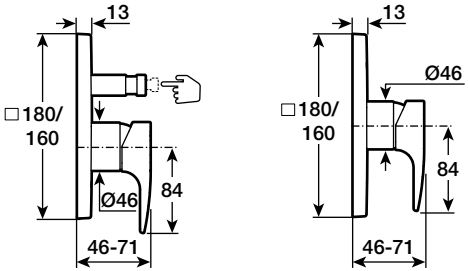

ESMAI

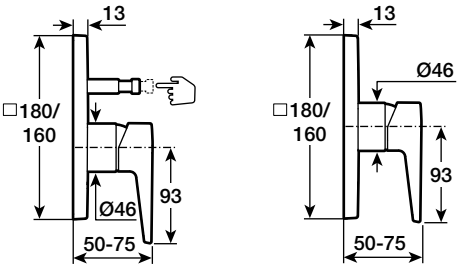

ATLAS

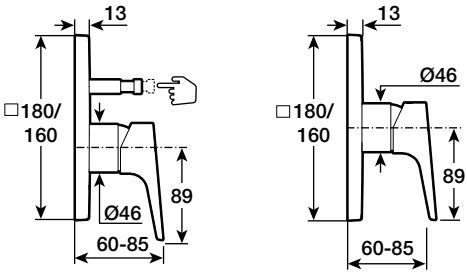

INSIGNIA

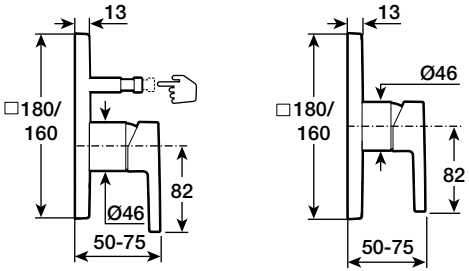

LANTA

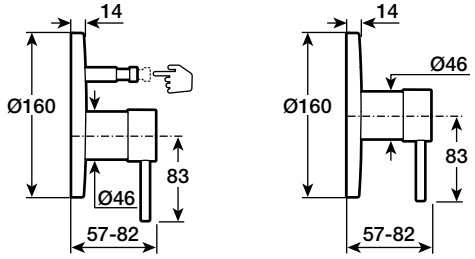

M2

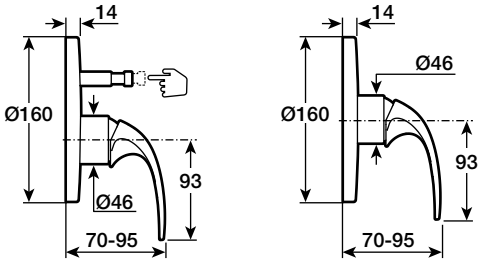

NAIA

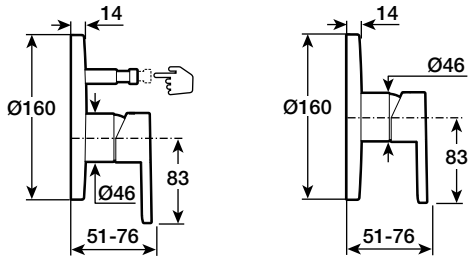

LOGICA

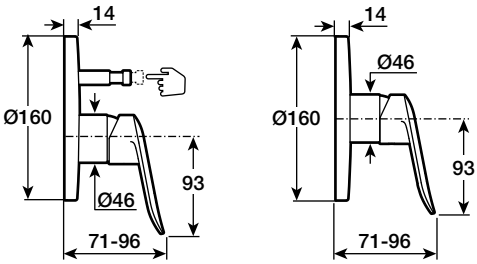

1

a

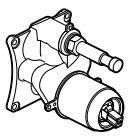
x1


x1

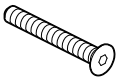
x3

b

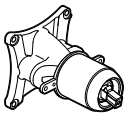
x1

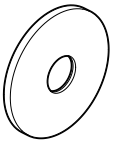
x1

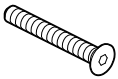
x2

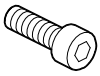
x4

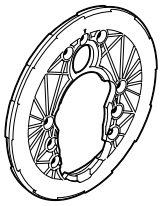
x1


x1


x1


x1

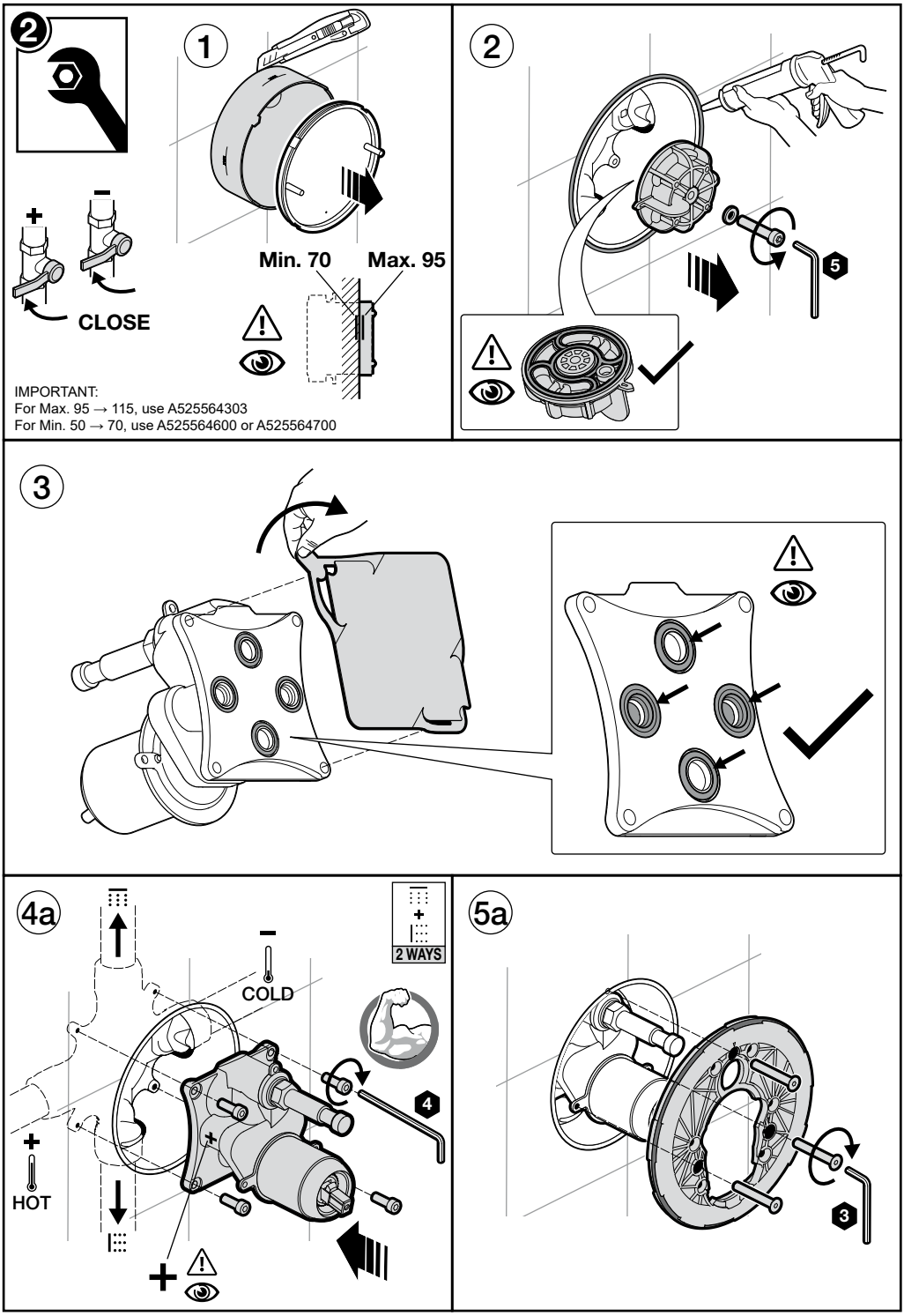
2
1
CLOSE
Min. 70
Max. 95
IMPORTANT:
For Max. 95 → 115, use A525564303
For Min. 50 → 70, use A525564600 or A525564700
2
5
3
4a
2 WAYS
COLD
HOT
4
5a
3

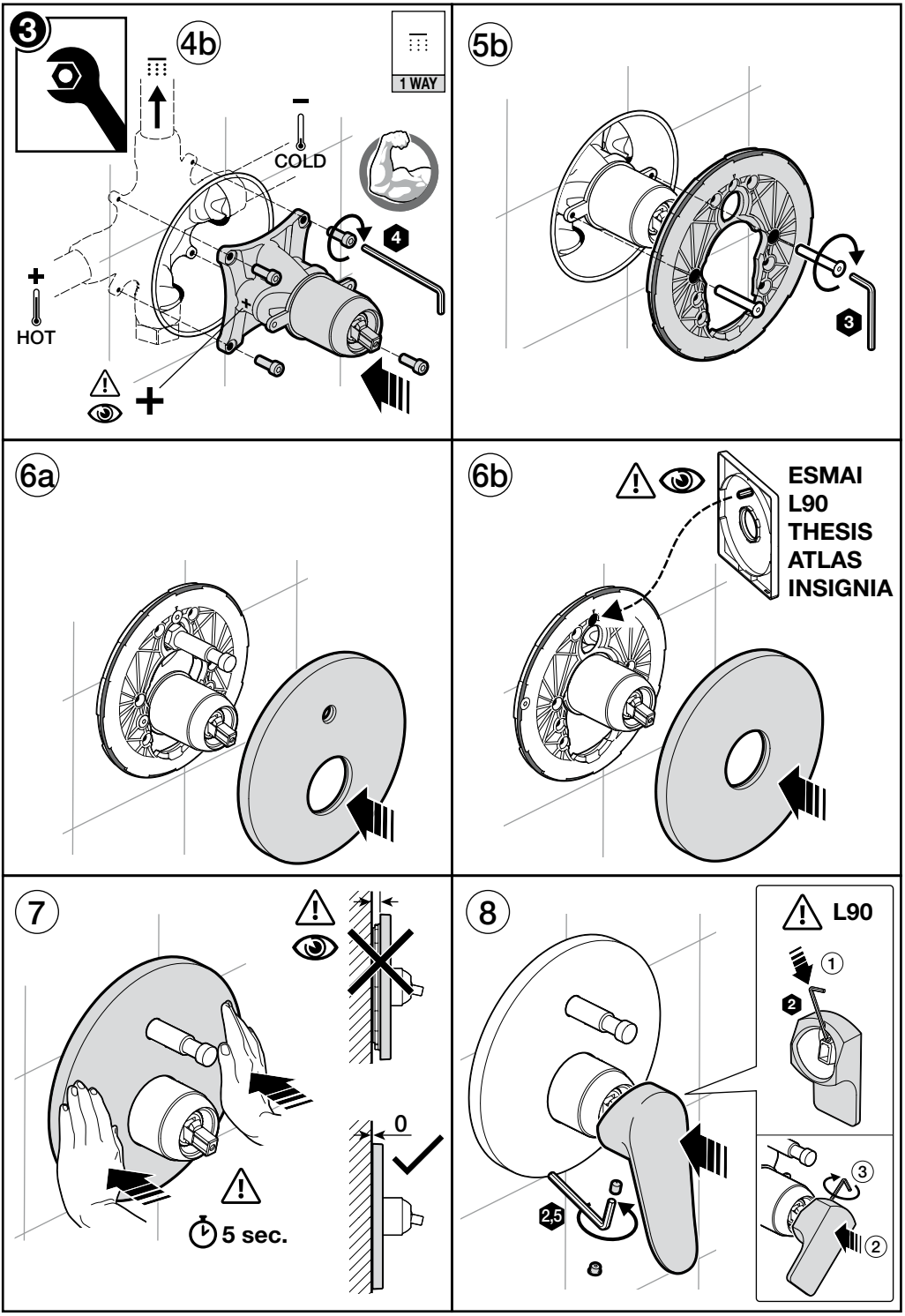
3
4b
1 WAY
COLD
HOT
4
5b
3
6a
6b
ESMAI
L90
THESIS
ATLAS
INSIGNIA
7
0
5 sec.
8
L90
1
2
2,5
3
2

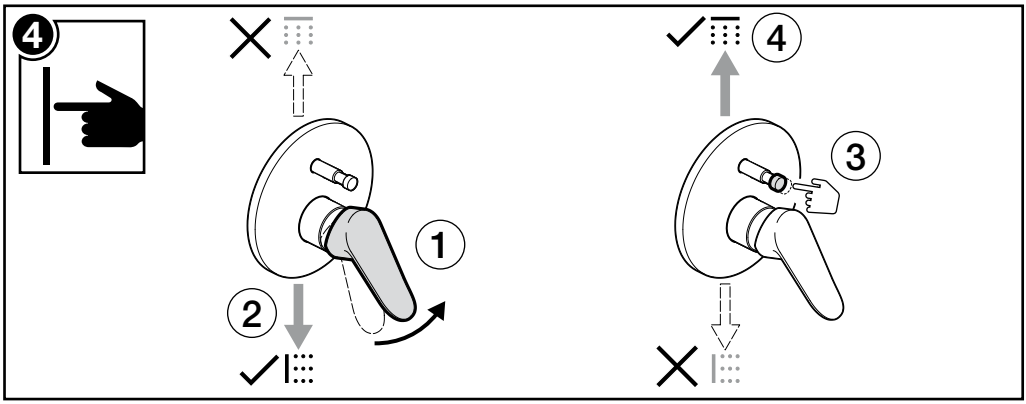

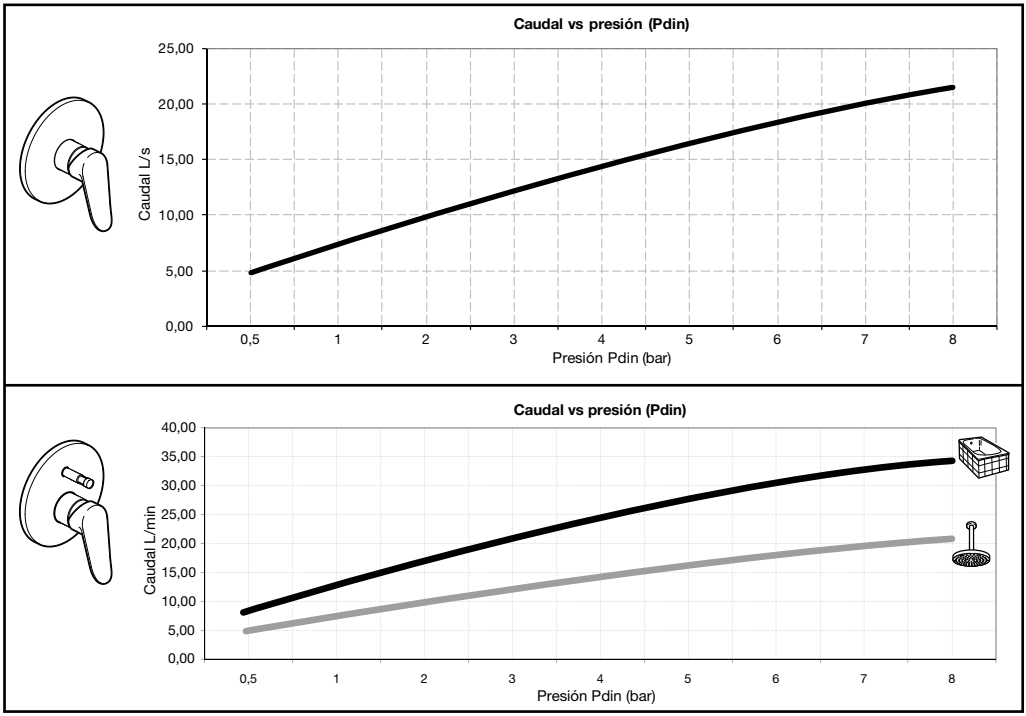

P	P bar	MAX 10	
P	P bar	5 MAX MIN 1	3 2
T	°C	80 MAX.	65 50



A5A0B01	L90
A5A0B50	THESIS
A5A0B31	ESMAI
A5A0B11	LANTA
A5A0B68	M2
A5A0B27	LOGICA
A5A0B90	ATLAS
A5A0B96	NAIA
A5A0B3A	INSIGNIA

A5A2B01	L90
A5A2B50	THESIS
A5A2B31	ESMAI
A5A2B11	LANTA
A5A2B68	M2
A5A2B27	LOGICA
A5A2B90	ATLAS
A5A2B96	NAIA
A5A2B3A	INSIGNIA

1.1	AG0041800R	L90
1.2	A525022600	THESIS
1.3	A525029600	ESMAI
1.4	AG0121400R	LANTA
1.5	AG0036900R	M2
1.6	AG0018100R	LOGICA
1.7	AG0116300R	ATLAS
1.8	AG01370..R	NAIA
1.9	AG01542..R	INSIGNIA
2.1	AG0121900R	L90
		THESIS
		INSIGNIA
2.2	AG0121100R	ESMAI
		ATLAS
2.3	AG01213..R	LANTA
		M2
		LOGICA
		NAIA
3	AG0120900R	
4.1	AG0032100R	L90
		M2
4.2	AG00853..R	THESIS
		ESMAI
		LOGICA
		ATLAS
		NAIA
		INSIGNIA
4.3	AG0121500R	LANTA

5.1	A525027803	L90
		M2
5.2	A525023507	THESIS
		ESMAI
		LANTA
		LOGICA
		ATLAS
		NAIA
		INSIGNIA
6	AG0110607R	
7.1	A525022800	L90
		THESIS
	AG02188CNR	INSIGNIA
7.2	A525006500	ESMAI
		LANTA
		M2
		LOGICA
		ATLAS
	AG02186CNR	NAIA
8.1	AG0121600R	L90
		M2
8.2	A525006800	THESIS
		ESMAI
		LOGICA
		ATLAS
	AG02189CNR	NAIA
		INSIGNIA
8.3	AG0121700R	LANTA
9	AG0121000R	

10.1	AG01271..R	L90
		THESIS
		INSIGNIA
10.2	AG0127000R	ESMAI
		ATLAS
10.3	AG01212..R	LANTA
		M2
		LOGICA
		NAIA

CÓDIGO / CODE

0000000 .. 0

ACABADO / FINISH

www.roca.net

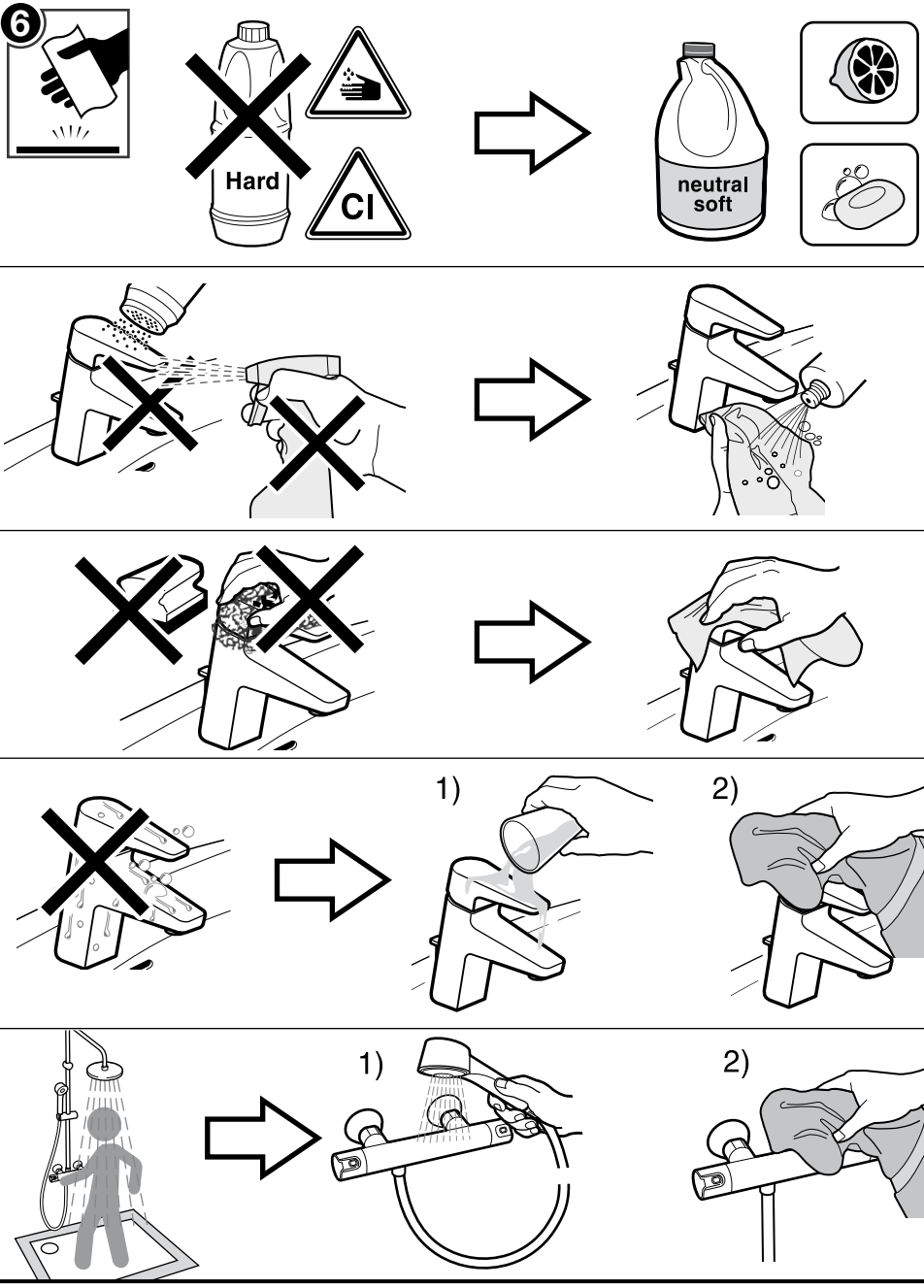

A523094707p

Roca

Roca Sanitario, S.A.
Avda. Diagonal, 513
08029 Barcelona
SPAIN
www.roca.com

933 661 266
LÍNEA DE ATENCIÓN AL CONSUMIDOR ESPAÑA
SERVICIO TÉCNICO ESPAÑA

productsupport.rs@roca.net
soporteproducto.rs@roca.net

Box Universal

A525869403



Roca

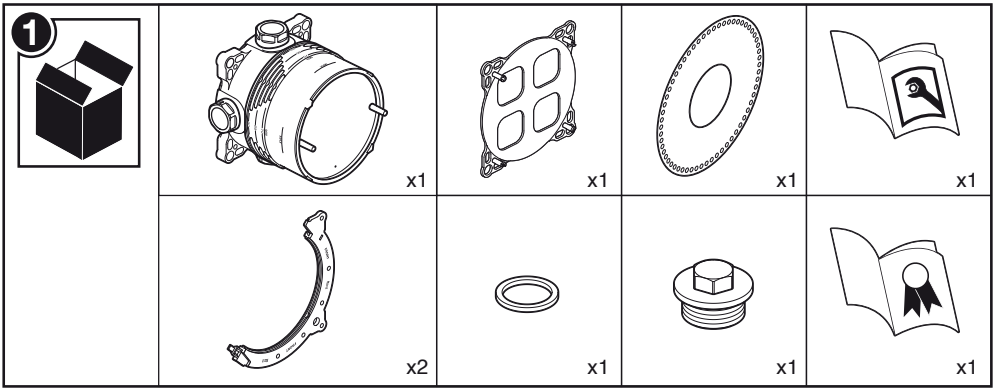
1
x1
x1
x1
x1
x2
x1
x1
x1

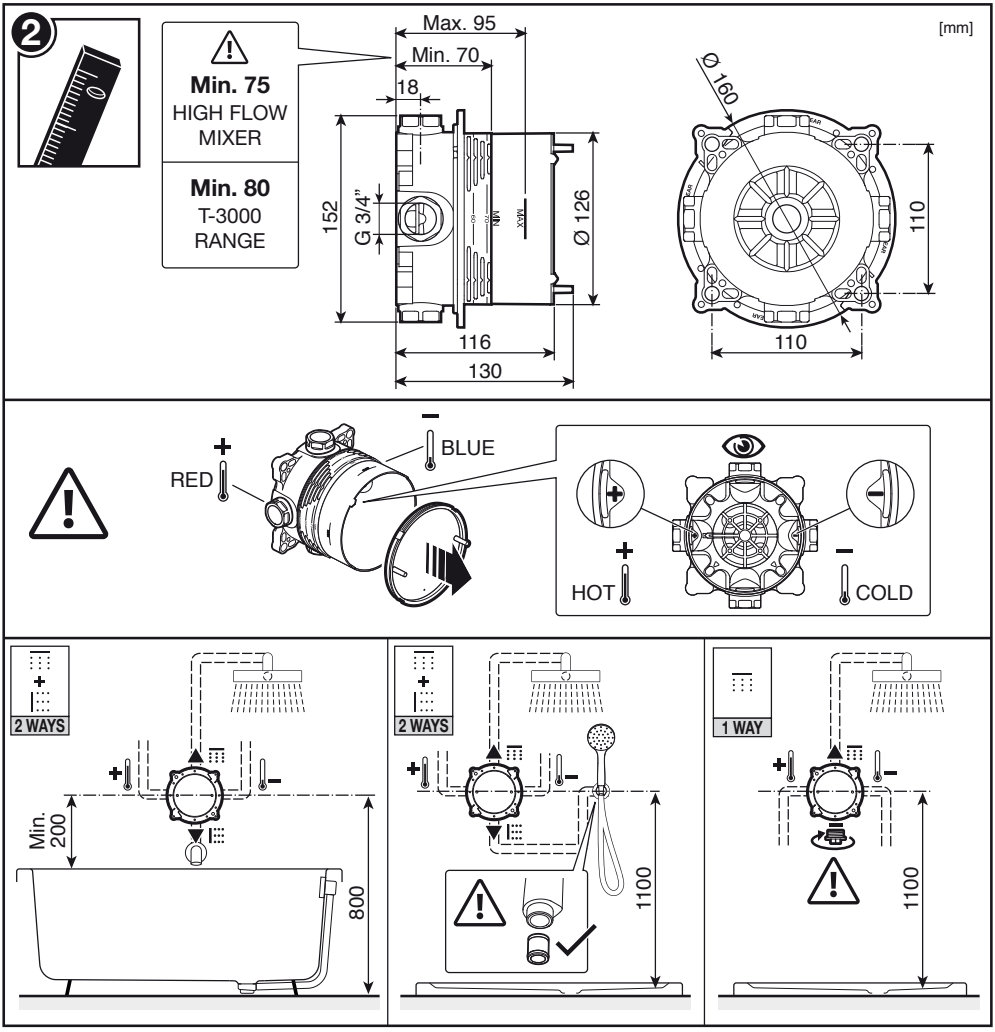
2
Min. 75
HIGH FLOW MIXER
Min. 80
T-3000 RANGE
Max. 95
Min. 70
18
152
G 3/4"
Ø 126
116
130
[mm]
Ø 160
110
110
RED
BLUE
HOT
COLD
2 WAYS
Min. 200
800
2 WAYS
1100
1 WAY
1100

[mm]

A

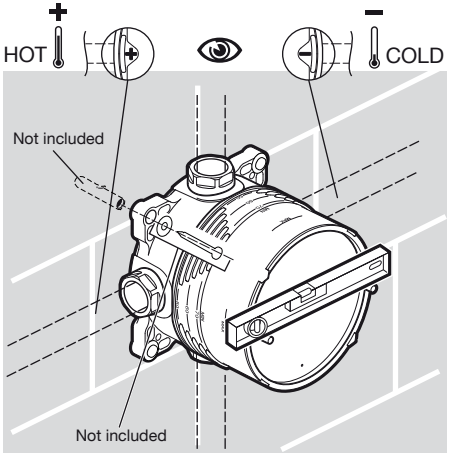

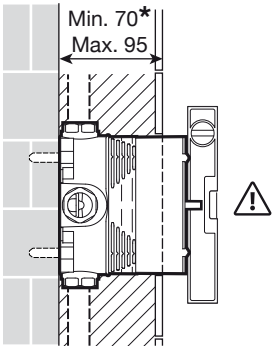

*
Min. 75 for HIGH FLOW ref: A5A9A4A.../A5A9B4A
Min. 80 for T3000 ref: A5A2I09... / A5A2K09...

B

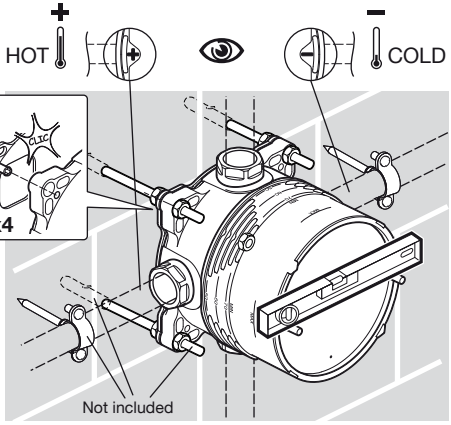

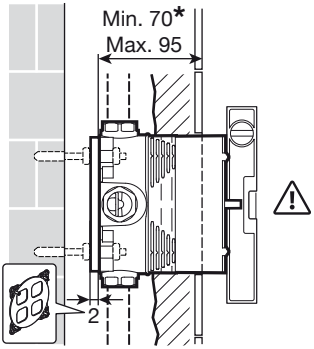

*
Min. 75 for HIGH FLOW ref: A5A9A4A.../A5A9B4A
Min. 80 for T3000 ref: A5A2I09... / A5A2K09...

C

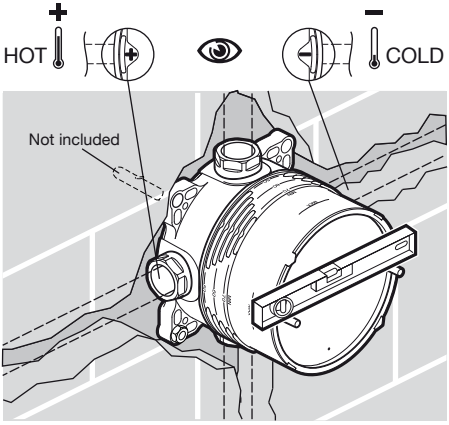

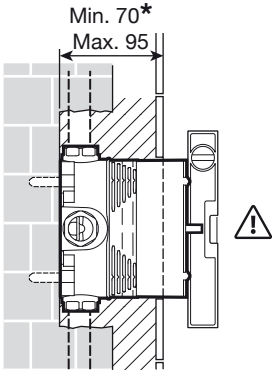

*
Min. 75 for HIGH FLOW ref: A5A9A4A.../A5A9B4A
Min. 80 for T3000 ref: A5A2I09... / A5A2K09...



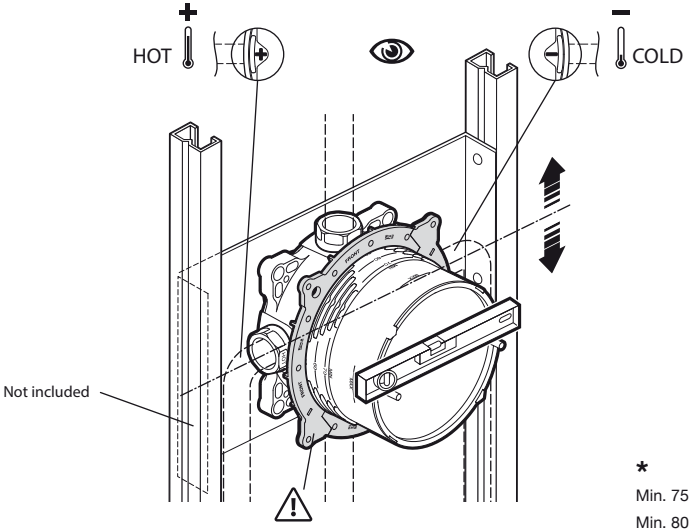

[mm]

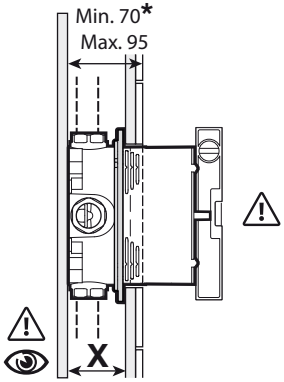

*

Min. 75 for HIGH FLOW ref: A5A9A4A.../A5A9B4A

Min. 80 for T3000 ref: A5A2I09... / A5A2K09...

1

[mm]

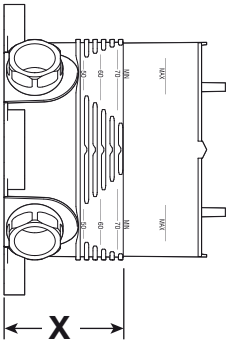

50-55-60-65-70

2

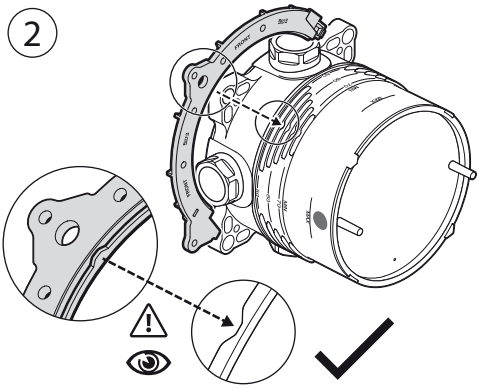

3

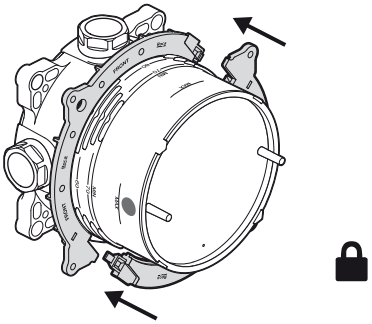

4

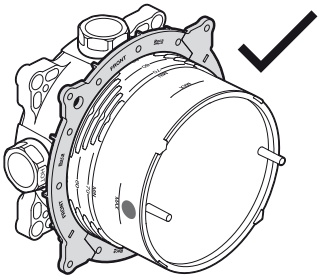

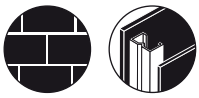

3

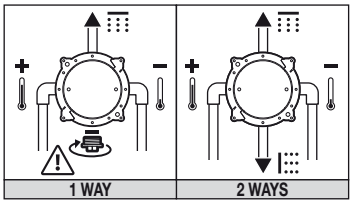
1 WAY
2 WAYS

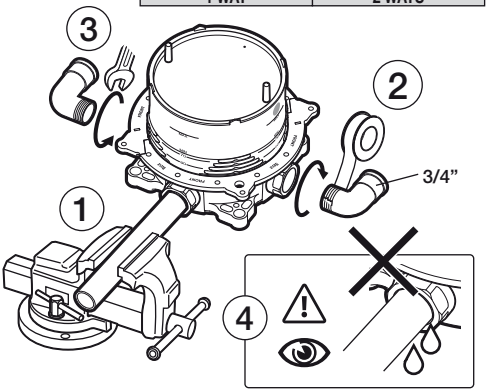
3
2
3/4”
1
4

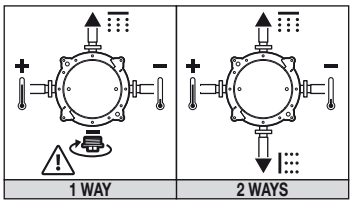
1 WAY
2 WAYS

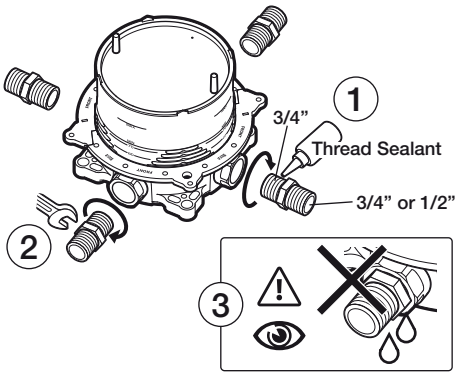
1
3/4”
Thread Sealant
3/4” or 1/2”
2
3

4

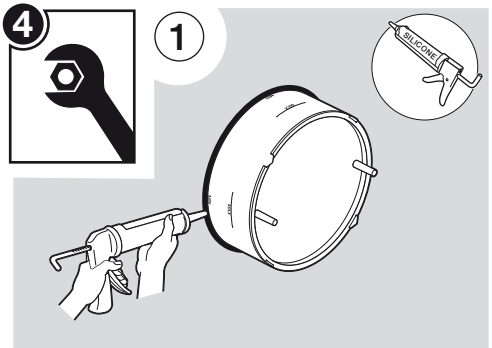
1
SILICONE

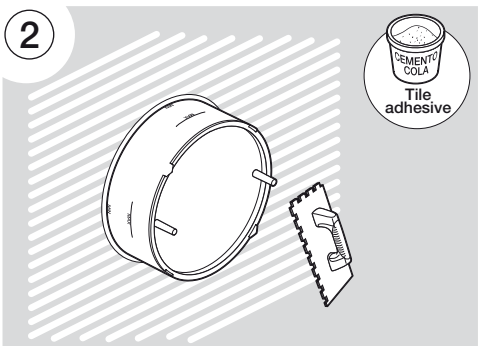
2
CEMENTO COLA
Tile adhesive

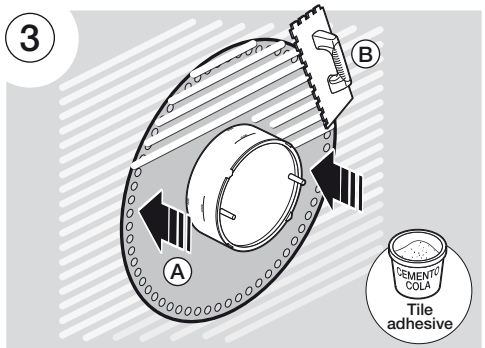
3
B
A
CEMENTO COLA
Tile adhesive

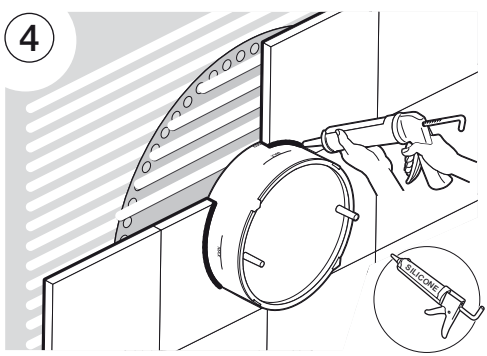
4
SILICONE

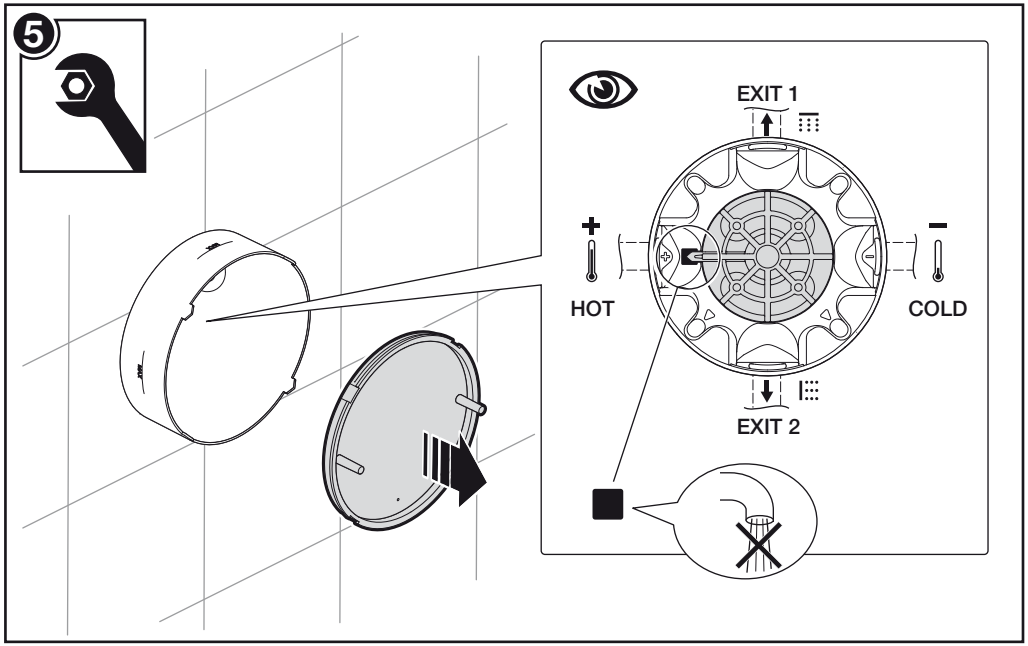
5
EXIT 1
HOT
COLD
EXIT 2

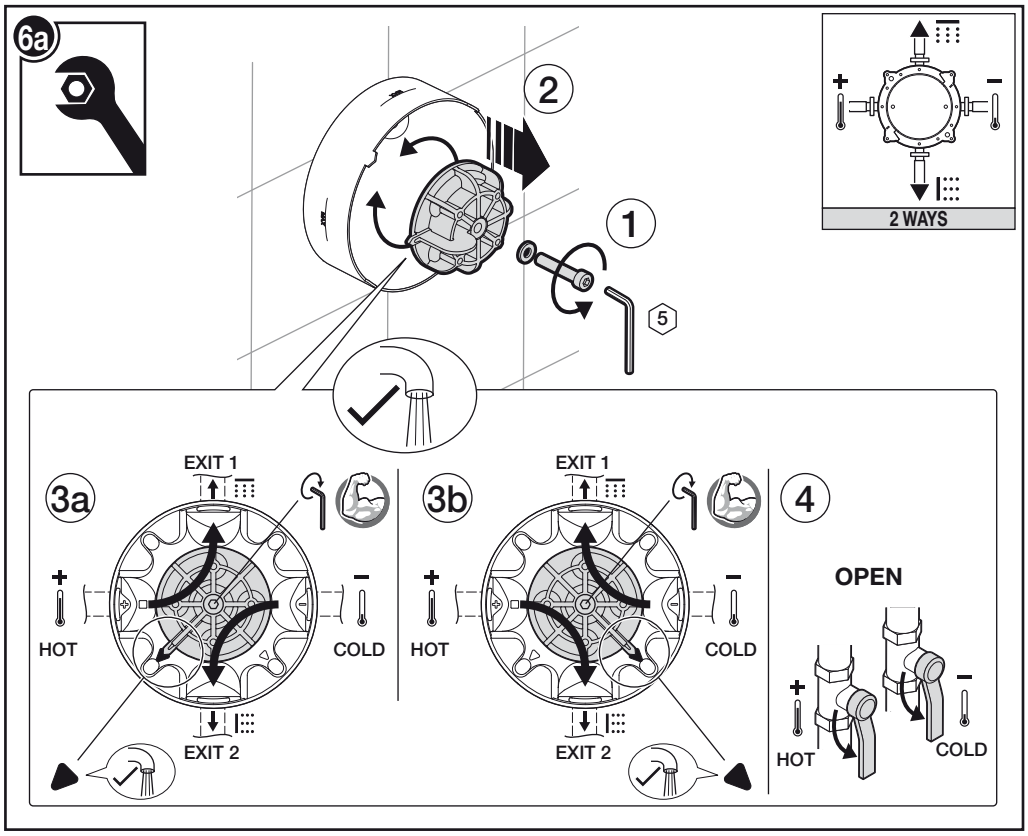
6a
2
1
5
2 WAYS
3a
EXIT 1
HOT
COLD
EXIT 2
3b
EXIT 1
HOT
COLD
EXIT 2
4
OPEN
HOT
COLD

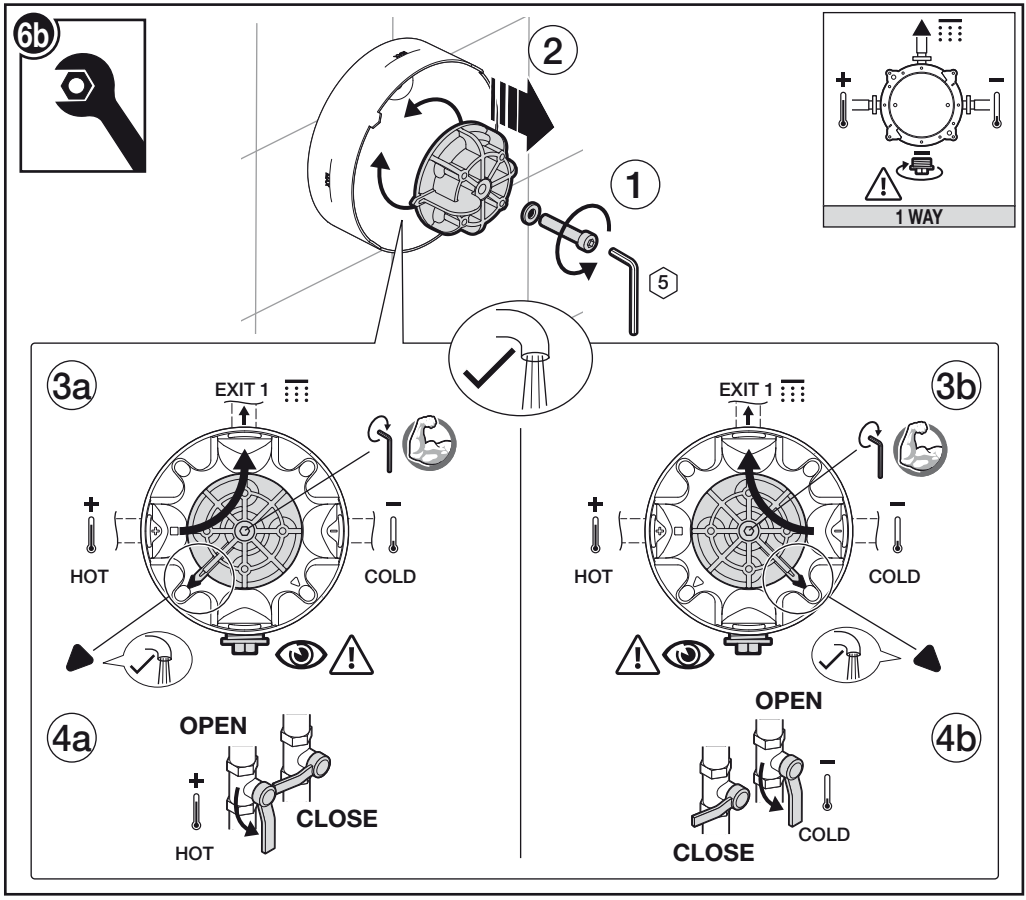
6b
2
1
5
1 WAY
3a
EXIT 1
HOT
COLD
3b
EXIT 1
HOT
COLD
4a
OPEN
CLOSE
HOT
OPEN
4b
CLOSE
COLD

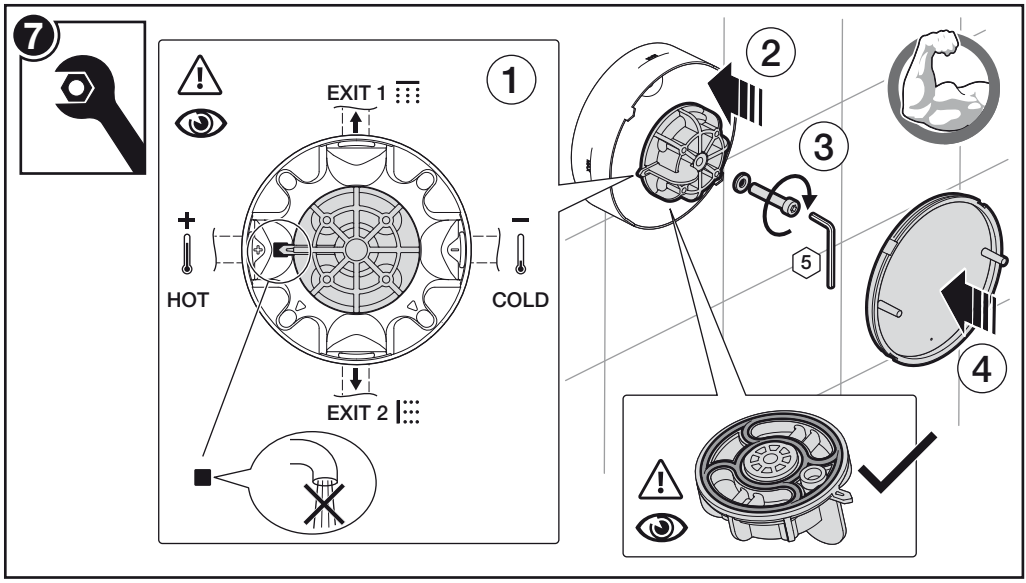
7
1
EXIT 1
HOT
COLD
EXIT 2
2
3
5
4

8

Solo
Only

T-3000

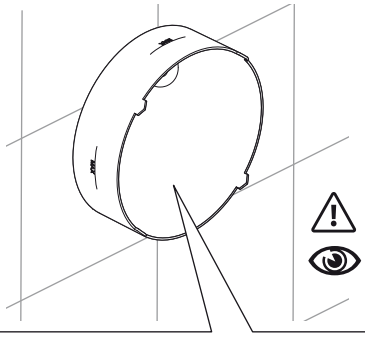

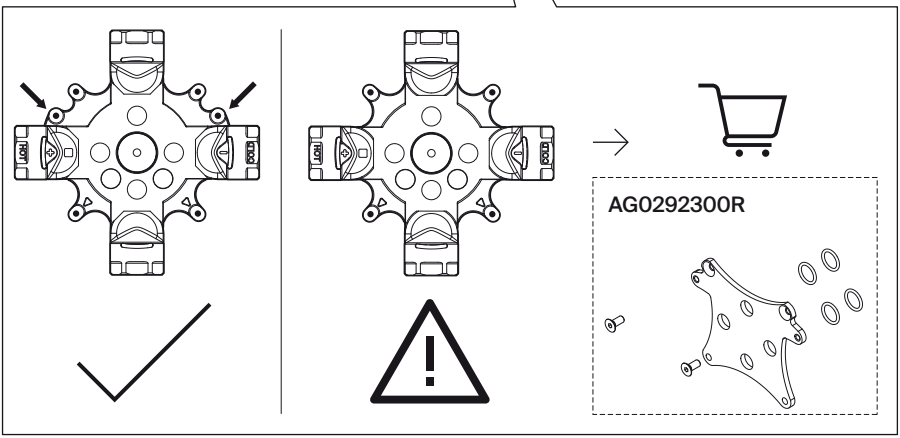

9a

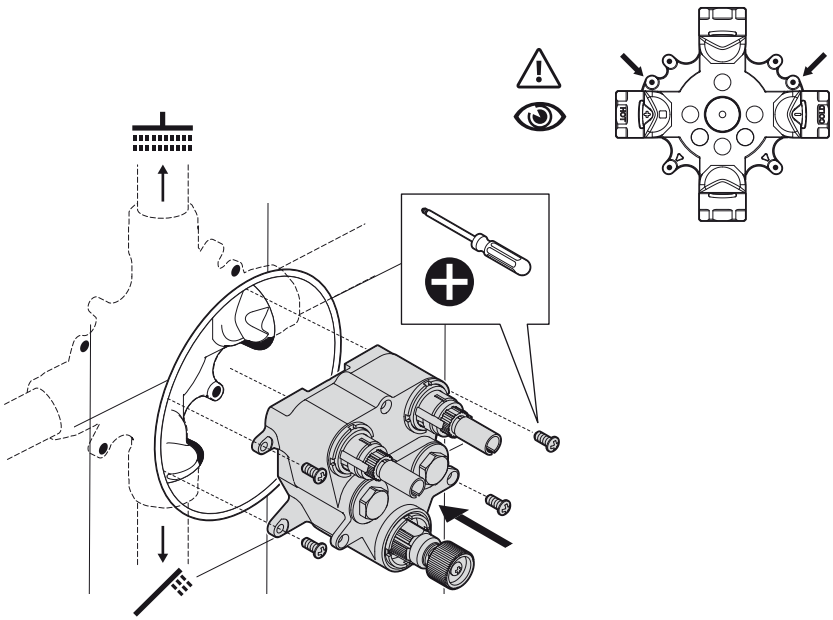

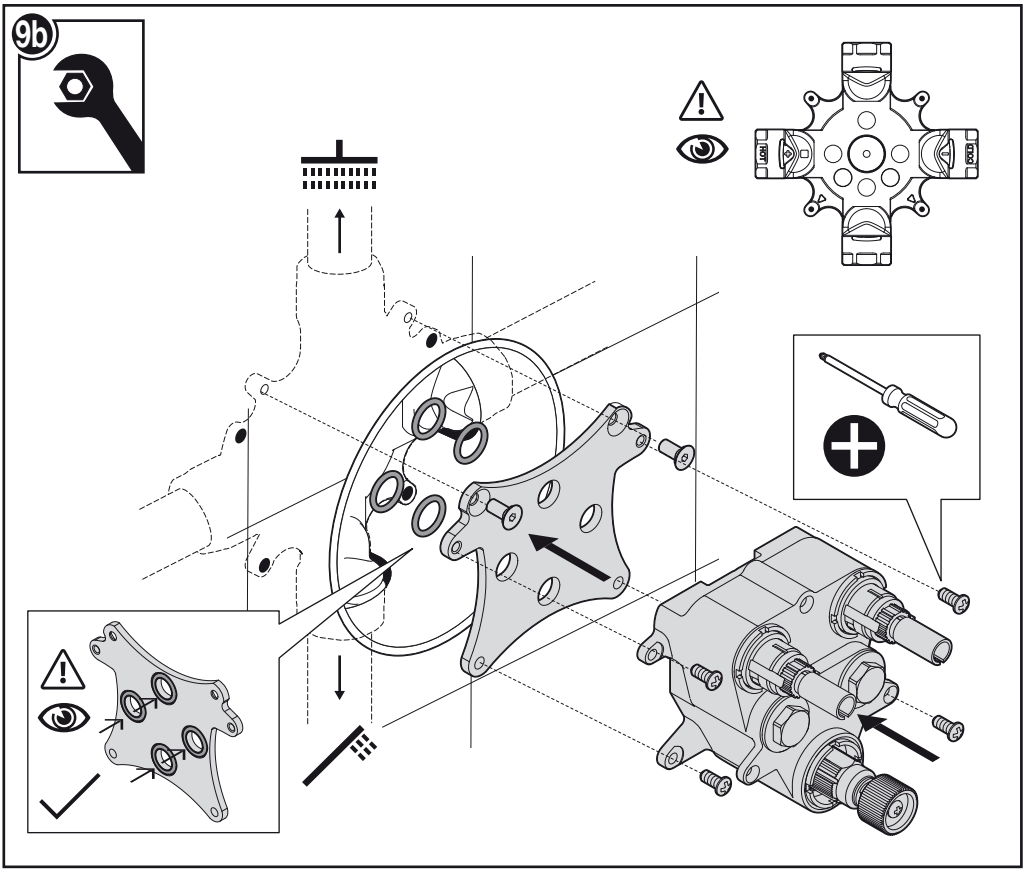
9b

8

1	AG0120000R
2	AG0119900R
3	AG0198400R

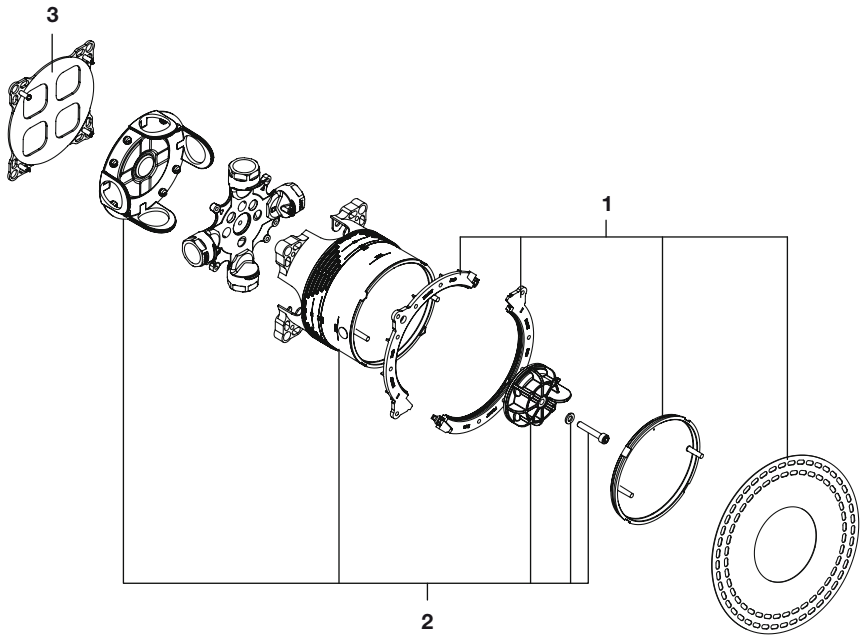

P	P bar	MAX 10	TEST 16
P	P bar	5 MAX MIN 1	3 2
T	°C	80 MAX.	65 50

LOGICA

A5A0B27...

2 WAYS

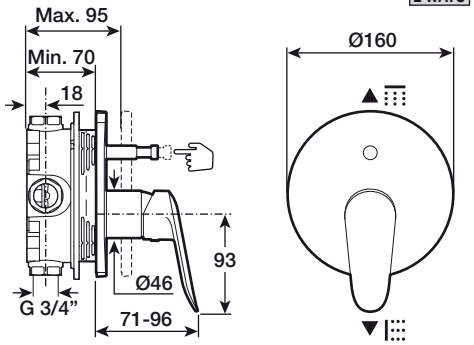

A5A2B27...

1 WAY

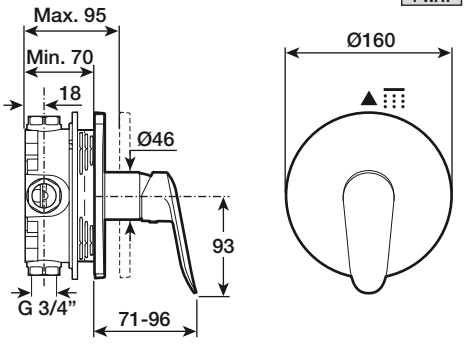

ESMAI

A5A0B31...

2 WAYS

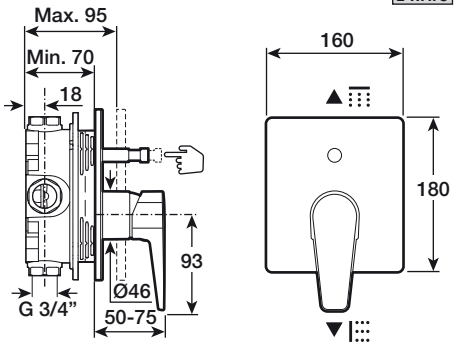

A5A2B31...

1 WAY

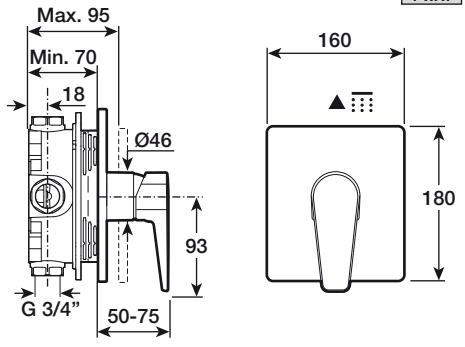

M2

A5A0B68...

2 WAYS

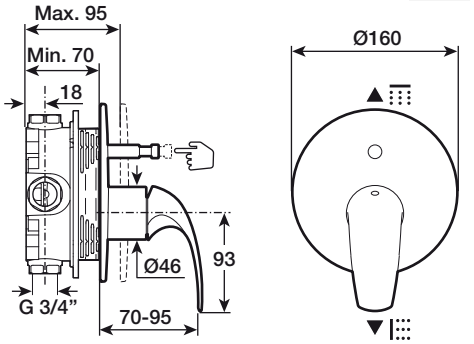

A5A2B68...

1 WAY

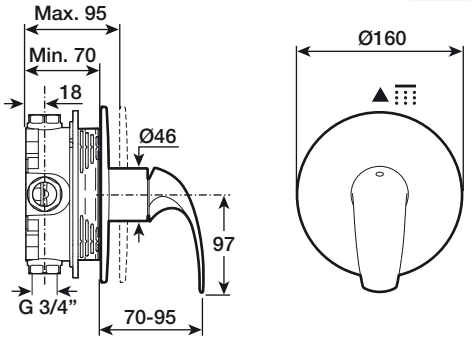

LANTA

A5A0B11...

2 WAYS

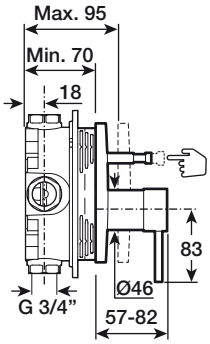

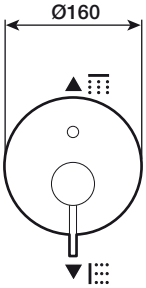

A5A2B11...

1 WAY

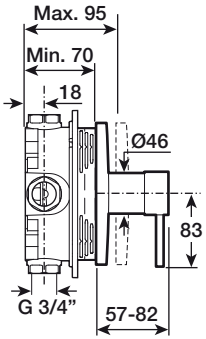

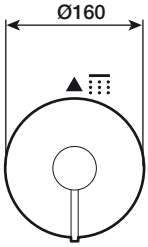

NAIA

A5A0B96...

2 WAYS

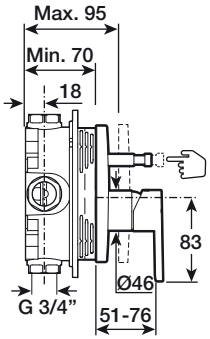

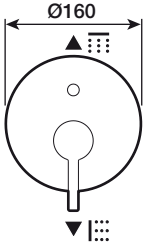

A5A2B96...

1 WAY

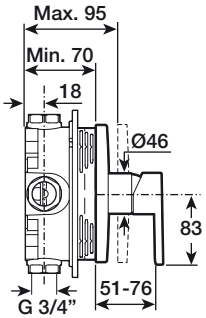

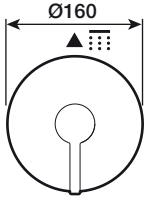

THESIS

A5A0B50...

2 WAYS

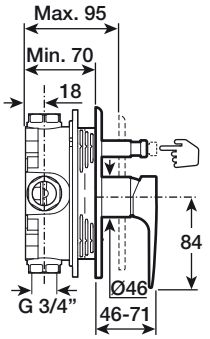

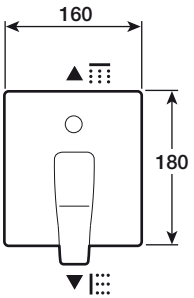

A5A2B50...

1 WAY

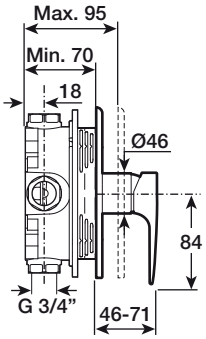

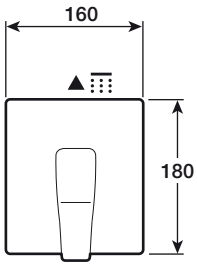

L90

A5A0B01...

2 WAYS

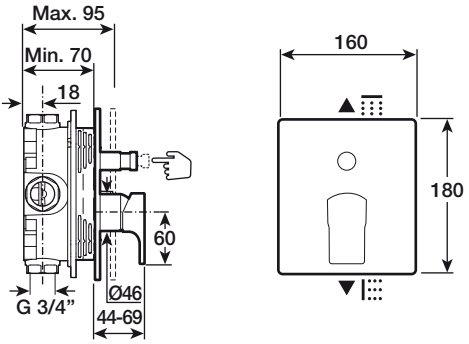

A5A2B01...

1 WAY

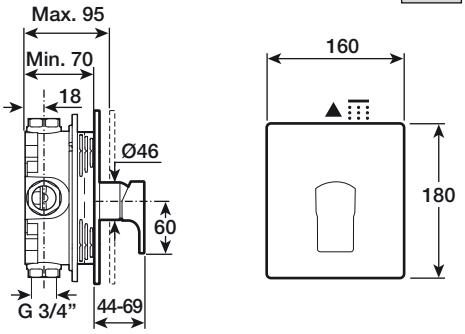

ATLAS

A5A0B90...

2 WAYS

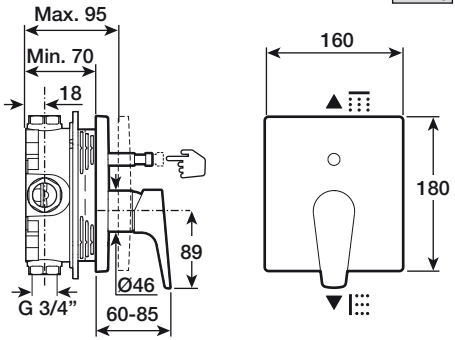

A5A2B90...

1 WAY

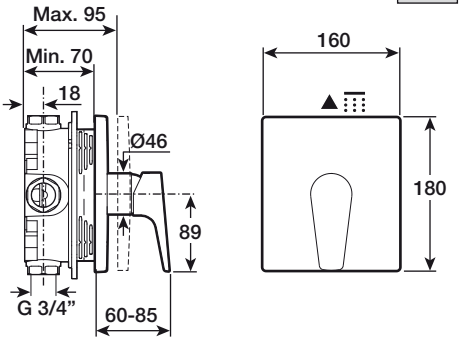

INSIGNIA

A5A0B3A...

2 WAYS

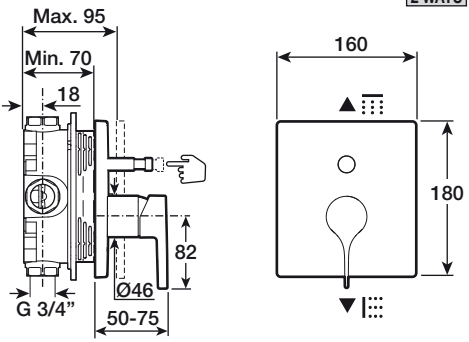

A5A2B3A...

1 WAY

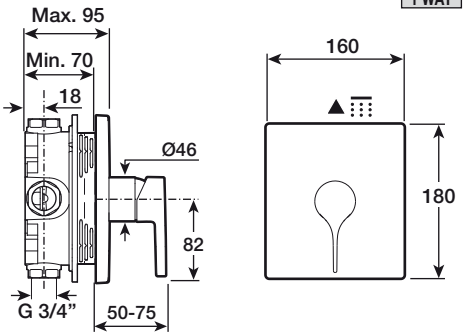

T1000

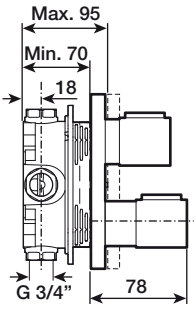

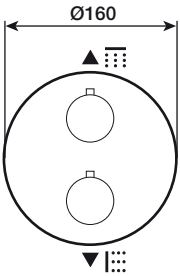

A5A0C09...



A5A2C09...



T1000 SQUARE

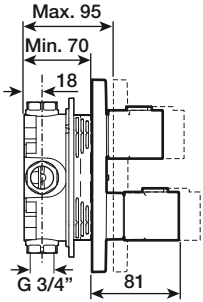

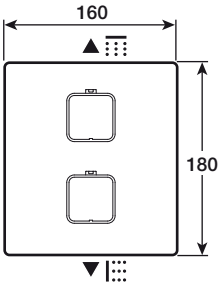

A5A0C1A...



A5A2C1A...



T2000

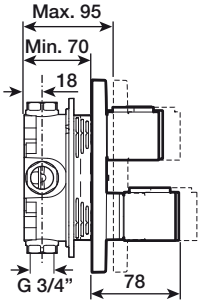

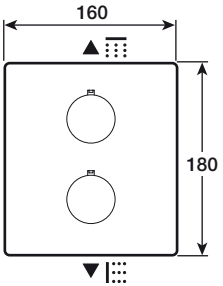

A5A0C88...

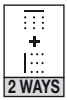

A5A2C88...



L90-T

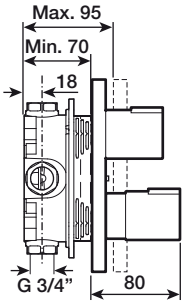

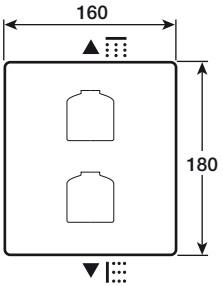

A5A0C01...



A5A2C01...



T-3000

A5A2I09...

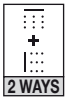

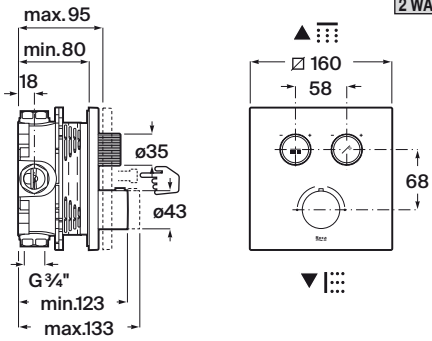

A5A2K09...



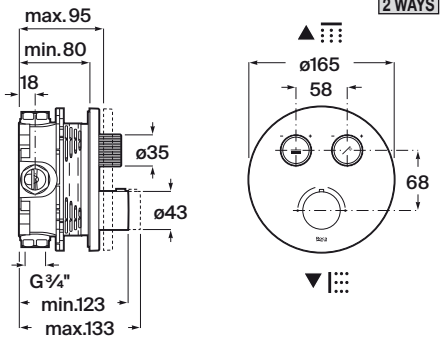

A523094407-k

Roca Sanitario, S.A.U.
Avda Diagonal, 513
08029 Barcelona - España
roca.com