

T-3000

Switch Round built-in thermostatic shower valve with rain shower head, shower handset and shower rail kit

PRICE (VAT INCLUDED)

£1419.84

TECHNICAL DRAWINGS

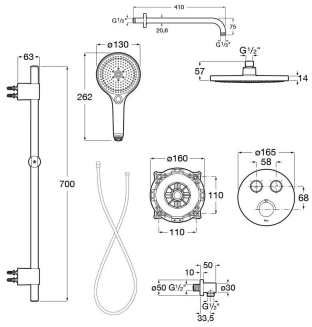

FEATURES

Acoustic level (dB): Group 1 (Up to 20 dB)
Aerator type: Integrated
Application: Shower
Bi-nickel chrome
Check valve
Diverter: Automatic
Diverter-flow regulator
Excentrics included
Faucet type: Thermostatic
Installation type: Built-in
Max continuous working temperature (°C): 80
Maximum Continuous Working Pressure (kPa): 5
Maximum Continuous Working Pressure (mca): 10
Minimum Continuous Working Pressure (kPa): 1000
Mininium Continuous Working Pressure (mca): 10
Number of water inlets: 2
Temperature selection
Type of cartridge: Thermostatic
Warranty Domestic Use: 10 years
Waste type: Waste not included
Water connection included: Included

EverShine

Quick Reaction

SafeTouch

Safety 38°

© Copyright 2026, Roca Sanitario, S.A. - All rights reserved | 26-11-2026 | https://www.uk.roca.com/products/switch-round-built-thermostatic-shower-valve-rain-shower-head-shower-handset-shower-rail-kit-TN5030100000000.?sku=TN50301000000003

REF: A5A2K09C00



T-3000

Round. Built-in thermostatic bath-shower mixer with automatic diverter (2 ways). Includes the built-in subset and the trim plate. Complete set

PRICE (VAT INCLUDED)

£391.79

TECHNICAL DRAWINGS

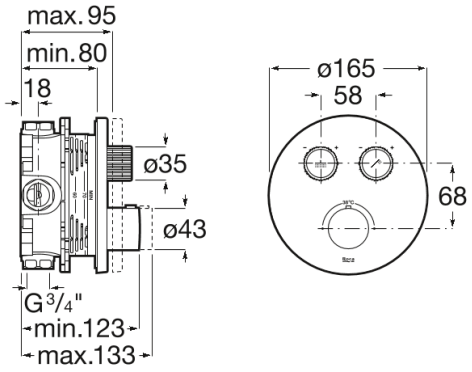

FEATURES

Acoustic level (dB): Group 1 (Up to 20 dB)

Application: Shower

Diverter-flow regulator

Faucet type: Thermostatic

Max continuous working temperature (°C): 80

Temperature selection

Type of cartridge: Thermostatic

Warranty Domestic Use: 2 years

Waste type: Waste not included



EverShine



Quick Reaction



SafeTouch



Safety 38°

© Copyright 2026, Roca Sanitario, S.A. - All rights reserved | 15-11-2026 | https://www.uk.roca.com/products/round-built-thermostatic-bath-shower-mixer-automatic-diverter-2ways-includes-built-subset-trim-plate-complete-set-5A2K09..0?sku=A5A2K09C00



T-3000



The T-3000 Switch thermostatic mixer offers precise temperature control with quick reaction, helping to save water and energy.

INSTALLATION AND USER MANUALS

Installation manual

© Copyright 2026, Roca Sanitario, S.A. - All rights reserved | 15-11-2026 | https://www.uk.roca.com/products/round-built-thermostatic-bath-shower-mixer-automatic-diverter-2ways-includes-built-subset-trim-plate-complete-set-5A2K09..0?sku=A5A2K09C00



RAINSENSE

Stainless steel shower head for ceiling installation. Rain function

DIMENSIONS

Length	230 mm
Width	230 mm

COLOURS AND FINISHES

C0 Chrome

PRICE (VAT INCLUDED)

£72.84

FEATURES

Annual energy consumption (kWh/p.a.): 535.49

Flow rate (l/min - 3 bar): 8

Number of functions: 1

Showerhead diameter (mm): 230

Showerhead length (mm): 230

Showerhead shape: Circular

Showerhead width (mm): 230

Water flow restrictor

EasyClean®

TECHNICAL DRAWINGS

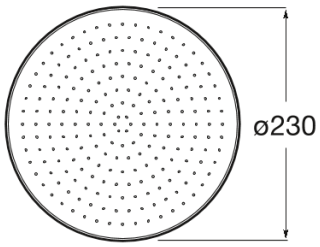

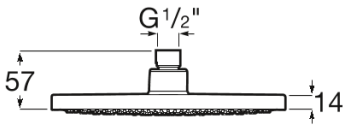

© Copyright 2026, Roca Sanitario, S.A. - All rights reserved | 12-11-2026 | https://www.uk.roca.com/products/stainless-steel-shower-head-ceiling-installation-rain-function-5B1803..0?sku=A5B1803C00

UNIFIED WATER LABEL

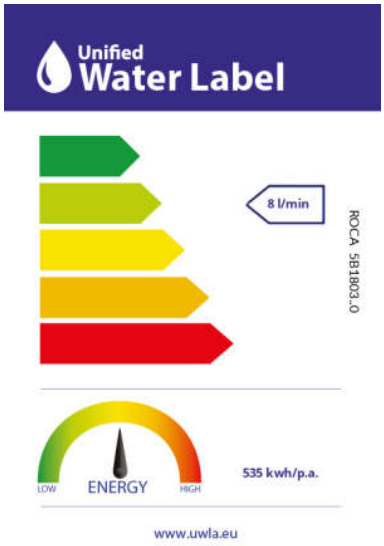

© Copyright 2026, Roca Sanitario, S.A. - All rights reserved | 12-11-2026 | https://www.uk.roca.com/products/stainless-steel-shower-head-ceiling-installation-rain-function-5B1803..0?sku=A5B1803C00

BOUGHT TOGETHER FREQUENTLY



Straight wall arm for shower head

5B0150C00



Straight wall arm for shower head

5B0250C00



Straight wall arm for shower head

5B0350C00



Straight ceiling arm for shower head

5B0450C00



Straight ceiling arm for shower head

5B0550C00



Straight ceiling arm for shower head

5B0650C00

Rainsense

Full range of shower-heads for wall or ceiling installation. Its Easyclean system prevents limescale build up.



© Copyright 2026, Roca Sanitario, S.A. - All rights reserved | 12-11-2026 | https://www.uk.roca.com/products/stainless-steel-shower-head-ceiling-installation-rain-function-5B1803..0?sku=A5B1803C00

REF: A5B1450SM0



AQUA

1/2" titanium black water inlet for shower hose

PRICE (VAT INCLUDED)

£71.59

TECHNICAL DRAWINGS

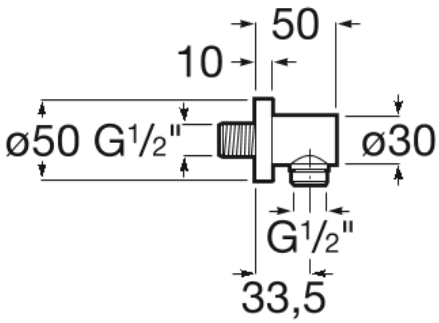

FEATURES

Net weight (kg): 0.16

© Copyright 2026, Roca Sanitario, S.A. - All rights reserved | 26-11-2026 | https://www.uk.roca.com/products/12titanium-black-water-inlet-shower-hose-5B1450..0?sku=A5B1450SM0

REF: A5B0250SM0



Straight wall arm for shower head

PRICE (VAT INCLUDED)

£91.76

TECHNICAL DRAWINGS

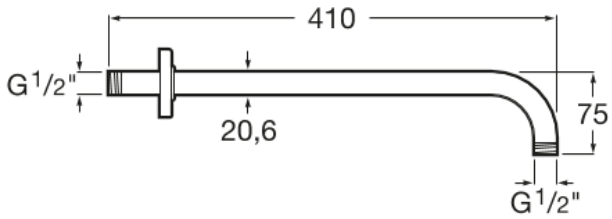

FEATURES

Net weight (kg): 0.4

© Copyright 2026, Roca Sanitario, S.A. - All rights reserved | 26-11-2026 | https://www.uk.roca.com/products/straight-wall-arm-shower-head-5B0250..0?sku=A5B0250SM0

REF: A5B2118C00

FLEX

Flexible 1.5m Shower Hose (anti-twist)

PRICE (VAT INCLUDED)

£39.90



FEATURES

© Copyright 2026, Roca Sanitario, S.A. - All rights reserved | 12-11-2026 | https://www.uk.roca.com/products/flexible-1-5m-shower-hose-anti-twist-5B2118..0?sku=A5B2118C00

BOUGHT TOGETHER FREQUENTLY



Hand-shower with 3 functions

5B8114..0

Flex

Maximum flexibility. Integration, elegance and easily adaptable to any space. This collection is an absolutely essential part of a lively, practical and versatile bathroom.



© Copyright 2026, Roca Sanitario, S.A. - All rights reserved | 12-11-2026 | https://www.uk.roca.com/products/flexible-1-5m-shower-hose-anti-twist-5B2118..0?sku=A5B2118C00



ROCABOX

Universal RocaBox

PRICE (VAT INCLUDED)

£164.98

TECHNICAL DRAWINGS

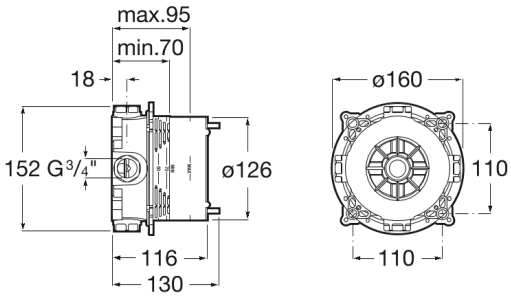

FEATURES

Application: Bath, Shower

Installation type: Built-in

© Copyright 2026, Roca Sanitario, S.A. - All rights reserved | 11-11-2026 | https://www.uk.roca.com/products/universal-rocabox-525869403?sku=A525869403

BOUGHT TOGETHER FREQUENTLY



Built-in bath-shower mixer with automatic diverter (2 ways). To be completed with RocaBox A525869403

5A0B9E..0



Built-in shower mixer (1 way). To be completed with RocaBox A525869403

5A2B9E..0



Built-in shower mixer (1 way)

5A2B5F..0



Built-in bath-shower mixer with automatic diverter and 2 outlets
Required: RocaBox A525869403

5A0B3A..0



Built-in bath-shower mixer with automatic diverter and 2 outlets. Required: RocaBox A525869403

5A0B3AC00



Built-in thermostatic bath-shower mixer with automatic diverter and 2 outlets
Required: RocaBox A525869403

5A0C3A..0



Built-in thermostatic bath-shower mixer with automatic diverter and 2 outlets. Required: RocaBox A525869403

5A0C3AC00



Built-in bath or shower mixer with 1 outlet
Required: RocaBox A525869403

5A2B3A..0

© Copyright 2026, Roca Sanitario, S.A. - All rights reserved | 11-11-2026 | https://www.uk.roca.com/products/universal-rocabox-525869403?sku=A525869403



RocaBox



A universal shower valve housing unit which is compatible with a variety of manual or thermostatic built-in mixers. Easy to install, compact in size and suitable for installation in stud or solid walls, RocaBox is the perfect solution for areas with limited space.

INSTALLATION AND USER MANUALS

Installation manual

Installation manual

© Copyright 2026, Roca Sanitario, S.A. - All rights reserved | 11-11-2026 | https://www.uk.roca.com/products/universal-rocabox-525869403?sku=A525869403