SPECIFICATION SHEET

COLLECTION: AXBRIDGE
PRODUCT CODE: BC-AXB-206-BRZ



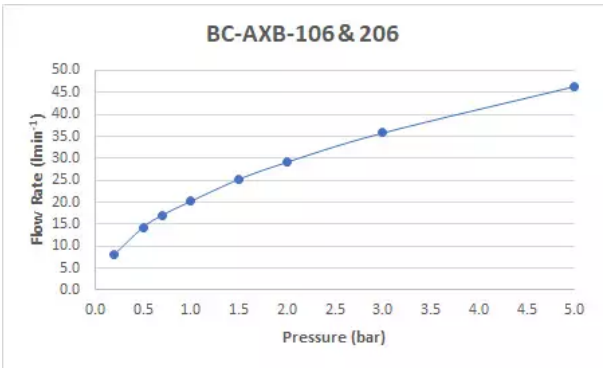

The flow rate displayed is calculated using ideal system conditions. This result should only be taken as an indication as the flow rate may vary depending on the specific in-situ configuration.

TAP TYPE
Pillar Taps

PLUMBING SYSTEM SUITABILITY
Gravity System, Pumped System, Combination Boiler, Pressurised System

MOUNTING
Deck Mounted

STYLE
Traditional, Lever Handles

DECK HOLE DRILL DIAMETER
22mm

WITH WATER FLOW STRAIGHTENER
Yes

SPARE PARTS
Cold ceramic cartridge FL-501-RTC. Hot ceramic cartridge FL-501-LTC

COLLECTION NAME
Axbridge

FINISH
Brushed Bronze

tel: 01934 744466
email: sales@vado.com
www.vado.com

WHERE INSPIRATION FLOWS
TAPS | SHOWERS | FURNITURE

SPECIFICATION SHEET

COLLECTION: AXBRIDGE
PRODUCT CODE: BC-AXB-206-BRZ

RECOMMENDED FLOW REGULATOR

FR-106/5-PLA (2 are required)

MINIMUM OPERATING PRESSURE

0.2 Bar LP

MAXIMUM OPERATING PRESSURE

5.0 Bar HP

GUARANTEE

15 Year Guarantee

tel: 01934 744466
email: sales@vado.com
www.vado.com

WHERE INSPIRATION FLOWS
TAPS | SHOWERS | FURNITURE

VADO

TECHNICAL DRAWING

COLLECTION: AXBRIDGE
PRODUCT CODE: BC-AXB-206-BRZ

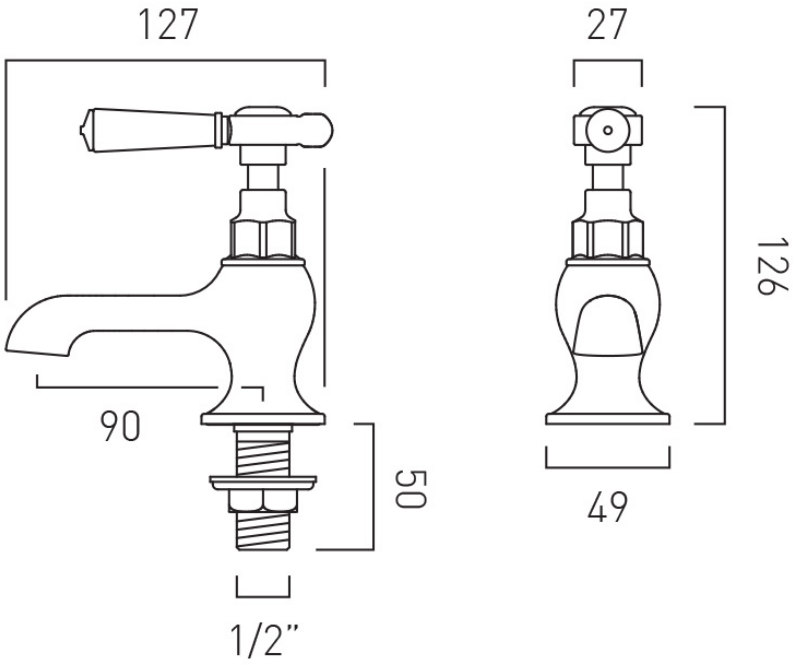

tel: 01934 744466
email: sales@vado.com
www.vado.com

WHERE INSPIRATION FLOWS
TAPS | SHOWERS | FURNITURE

VADO