SPECIFICATION SHEET

COLLECTION: AXBRIDGE
PRODUCT CODE: BC-AXB-200/SB-B-BRZ



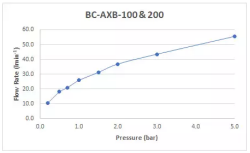

The flow rate displayed is calculated using ideal system conditions. This result should only be taken as an indication as the flow rate may vary depending on the specific in-situ configuration.

TAP TYPE
Basin Mixer Taps

FINISH
Brushed Bronze/Black

COLLECTION NAME
Axbridge

GUARANTEE
15 Year Guarantee

PLUMBING SYSTEM SUITABILITY
Gravity System

MINIMUM OPERATING PRESSURE
0.2 Bar LP

HANDLES
2 Handle

MOUNTING
Deck Mounted

WASTE
None (Smooth Bodied)

tel: 01934 744466
email: sales@vado.com
www.vado.com

WHERE INSPIRATION FLOWS
TAPS | SHOWERS | FURNITURE

SPECIFICATION SHEET

COLLECTION: AXBRIDGE
PRODUCT CODE: BC-AXB-200/SB-B-BRZ

WITH ECOTURN COLD START TECHNOLOGY

No

WITH WATER FLOW STRAIGHTENER

Yes

WITH WATER FLOW AERATOR

No

CONNECTIONS / FITTINGS

2 x 1/2" x 400mm flexipipe connections

DECK HOLE DRILL DIAMETER

35mm

SPARE PARTS

Cold ceramic cartridge FL-501-RTC, hot ceramic cartridge FL-501-LTC

STYLE

Traditional

tel: 01934 744466
email: sales@vado.com
www.vado.com

WHERE INSPIRATION FLOWS
TAPS | SHOWERS | FURNITURE

VADO

TECHNICAL DRAWING

COLLECTION: AXBRIDGE
PRODUCT CODE: BC-AXB-200/SB-B-BRZ

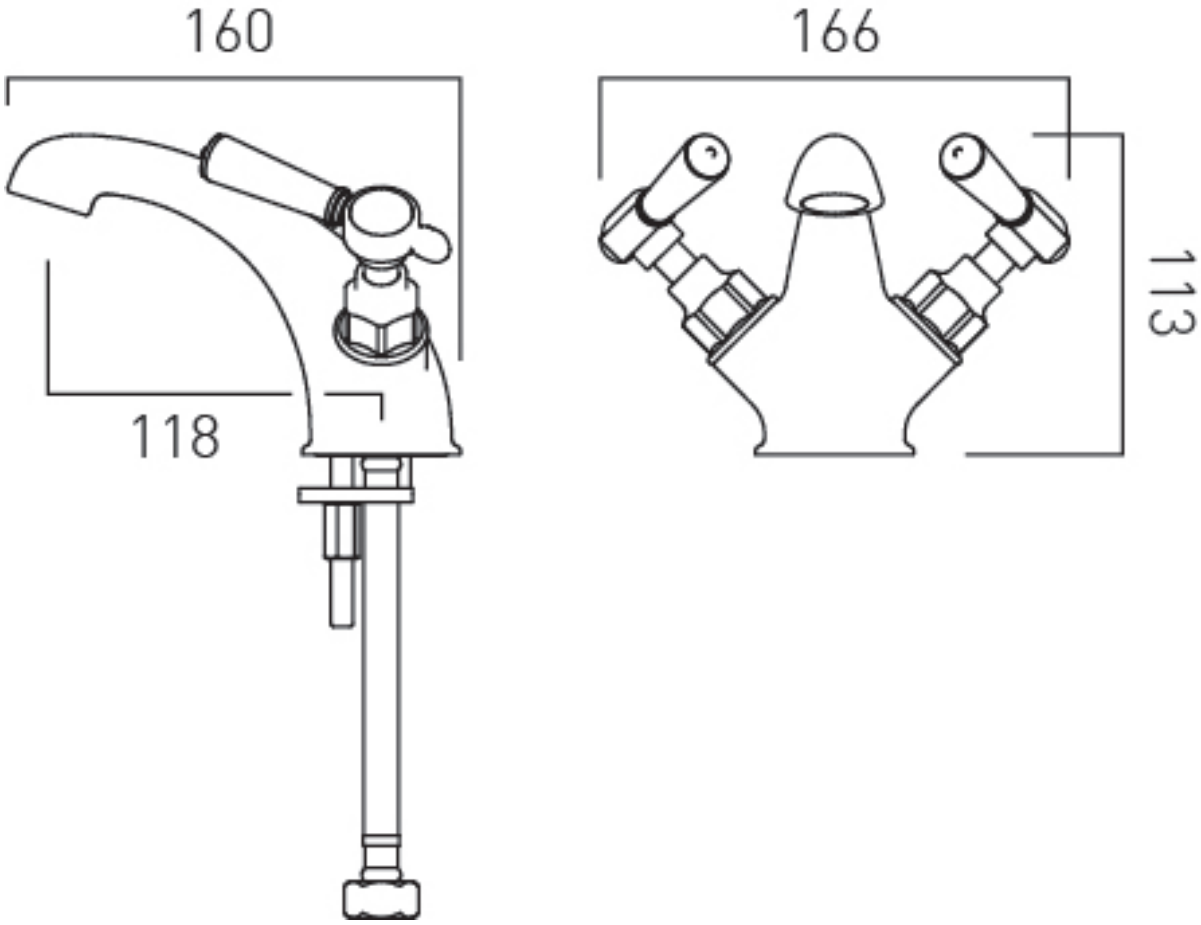

tel: 01934 744466
email: sales@vado.com
www.vado.com

WHERE INSPIRATION FLOWS
TAPS | SHOWERS | FURNITURE

VADO