

T-500

# Round built-in thermostatic shower valve with rain shower head, shower handset and shower rail kit

PRICE (VAT INCLUDED)

£1300.20

TECHNICAL DRAWINGS

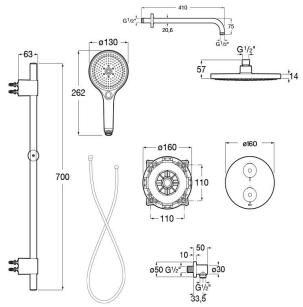


## FEATURES

Acoustic level (dB): Group 1 (Up to 20 dB)
Aerator type: Integrated
Application: Shower
Bi-nickel chrome
Check valve
Diverter: Automatic
Diverter-flow regulator
Excentrics included
Faucet type: Thermostatic
Installation type: Wall-mounted
Max continuous working temperature (°C): 80
Maximum Continuous Working Pressure (kPa): 5
Maximum Continuous Working Pressure (mca): 10
Minimum Continuous Working Pressure (kPa): 1000
Mininium Continuous Working Pressure (mca): 10
Number of water inlets: 2
Temperature selection
Type of cartridge: Thermostatic
Warranty Domestic Use: 10 years
Waste type: Waste not included
Water connection included: Included

EverShine

Quick Reaction

SafeTouch

Safety 38°

© Copyright 2026, Roca Sanitario, S.A. - All rights reserved | 25-11-2026 | https://www.uk.roca.com/products/round-built-thermostatic-shower-valve-rain-shower-head-shower-handset-shower-rail-kit-TN5030070000000.?sku=TN50300700000003