LAUFEN

REF: H4215720112601



MEDA

Vanity unit, 2 drawers, matches washbasin H810113

COLOUR AND FINISH

260 White Matt

Basin position : Central

Closing and opening system : Soft close drawers

Doors and drawers combination : 2 drawers

Furniture configuration : Drawers

Installation type : Wall-hung

Material : MDF

Net weight (kg) : 24.5

Organiser boxes : 1

TECHNICAL DRAWINGS

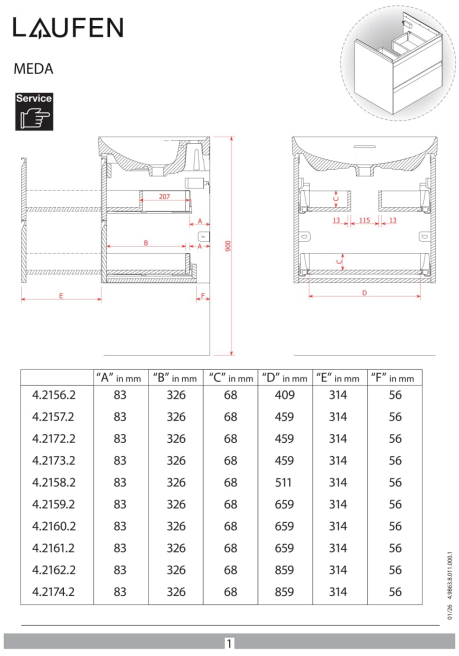

	"A" in mm	"B" in mm	"C" in mm	"D" in mm	"E" in mm	"F" in mm
4.2156.2	83	326	68	409	314	56
4.2157.2	83	326	68	459	314	56
4.2172.2	83	326	68	459	314	56
4.2173.2	83	326	68	459	314	56
4.2158.2	83	326	68	511	314	56
4.2159.2	83	326	68	659	314	56
4.2160.2	83	326	68	659	314	56
4.2161.2	83	326	68	659	314	56
4.2162.2	83	326	68	859	314	56
4.2174.2	83	326	68	859	314	56

© Copyright 2026, LAUFEN Bathrooms AG | https://www.laufen.com/products/vanity-unit-2drawers-matches-washbasin-h810113-H421572011...1?sku=H4215720112601

COMPATIBLE WITH



Washbasin

H810113...1041



Washbasin

H810113...1091



Washbasin

H810113...1111



Washbasin

H810113...1121

Towel holder

H493120...0001



Towel holder for furniture, 320 mm

H490951...0001



Space-saving siphon

H8942500000001



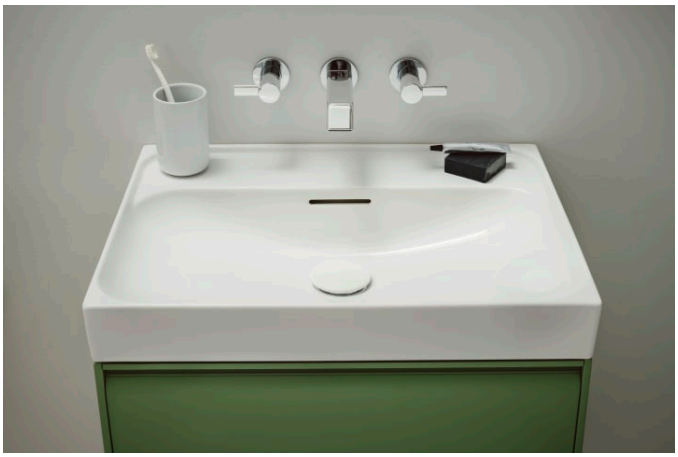

© Copyright 2026, LAUFEN Bathrooms AG | https://www.laufen.com/products/vanity-unit-2drawers-matches-washbasin-h810113-H421572011...1?sku=H4215720112601









© Copyright 2026, LAUFEN Bathrooms AG | https://www.laufen.com/products/vanity-unit-2drawers-matches-washbasin-h810113-H421572011...1?sku=H42157201126O1



MEDA

Versatile and timeless. The MEDA collection effortlessly complements any setting, from rental apartment to hotel suite, while reflecting the proven virtues of Swiss design; clarity, functionality and attention to detail. A style emblematic of Swiss designer Peter Wirz and his design firm Vetica.

© Copyright 2026, LAUFEN Bathrooms AG | https://www.laufen.com/products/vanity-unit-2drawers-matches-washbasin-h810113-H421572011...1?sku=H4215720112601

MEDA FURNITURE

Vanity unit
421572



TECHNICAL DATA

Order no.	421572 / 2 drawers
Dimensions (WxHxD)	584 x 515 x 448 mm
Matching for	washbasin Meda, order no. 810113
Specification	Body/Front – 19 mm MDF panels, lacquered or PVC furniture foil (only 267 – Wild oak) integrated aluminium handles lacquered in body color or anthracite (only 267 – Wild oak) 2 full extension drawers, anthracite (soft-close mechanism), incl. organizer
Weight	24,5 kg
Accessories incl.	Drawer organizer, U-shaped, order no. 496113
Accessories excl.	Towel holder chrome plated or lacquered, order no. 493120 Towel rail, anodized aluminium, order no. 490951 Space saving siphon, order no. 894250
Mounting acc. incl.	Installation set for furniture, order no. 492143
Mounting acc. excl.	Noise protection kit for furniture, order no. 497057

Mounting information	The walls installed on must meet the requirements of the furniture in terms of weight and the supplied fastening elements. If this cannot be guaranteed another method of installation needs to be chosen.
Colours Body/Front	260 – White matt 266 – Traffic grey 267 – Wild oak 465 – Cappuccino 990 – Specialcolor lacquered selection 999 – Multicolor lacquered selection
Colours Towel holder	
order no. 493120	004 – Chrome plated 268 – White matt 450 – Black matt
order no. 490951	104 – Aluminium glossy 105 – Aluminium 106 – Aluminium black

TECHNICAL DRAWINGS / S 1 : 20

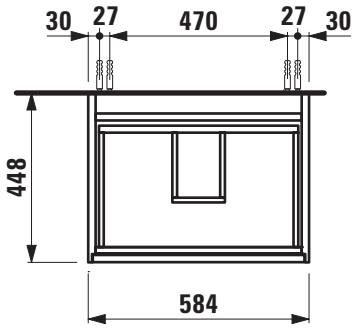

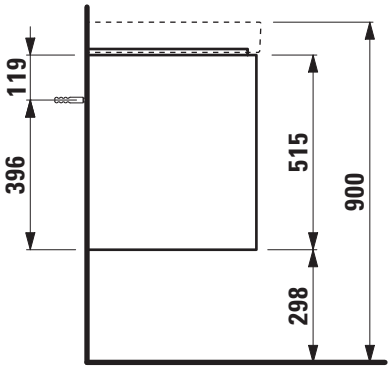

LAUFEN

REF: H8101130001041



MEDA

Washbasin

COLOUR AND FINISH

000 White

OPTIONS

104 - one tap hole, centre

Bowl position : Central

Fastening Distance (inch) : 11.02

Fastening Distance (mm) : 280

Fixing kit : Not included

Installation type : Vanity, Wall-hung

Internal Shape : Rectangular

Material : Ceramics

Net weight (kg) : 14.5

Number of fixing points : 2

Optional towel holder

Overflow type : Standard

Plug and Waste : Not included

Shape : Rectangular

Taphole configuration : 1 taphole in the middle

Waste : Not included

TECHNICAL DRAWINGS

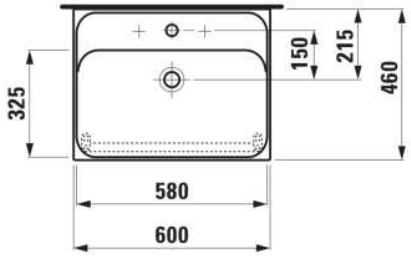

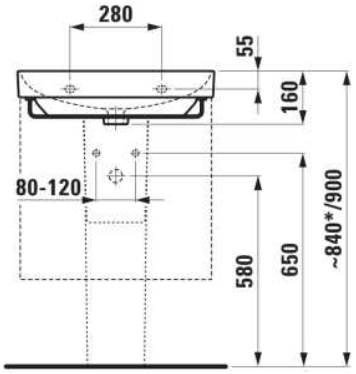

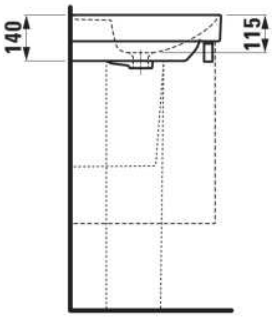

© Copyright 2026, LAUFEN Bathrooms AG | https://www.laufen.com/products/washbasin-H810113...1041?sku=H8101130001041

COMPATIBLE WITH



Basin mixer, projection 110 mm, fixed spout, with pop-up waste

HF506603100000



Vanity unit, 2 drawers, matches washbasin H810113

H421572011...1



Open waste with ceramic valve cover plate

H898184...0001



Pedestal for washbasin

H819950...0001



Semi-pedestal for washbasin

H819951...0001



LANI Towel frame 600 x 420 for washbasins Kartell • LAUFEN, MEDA, LUA, LAUFEN PRO S

H386961...0001



Towel holder lateral, right

H382120...0001



Towel holder lateral, left

H382121...0001



Towel holder Reling for washbasins 600 mm

H381123...0001

© Copyright 2026, LAUFEN Bathrooms AG | https://www.laufen.com/products/washbasin-H810113...1041?sku=H8101130001041



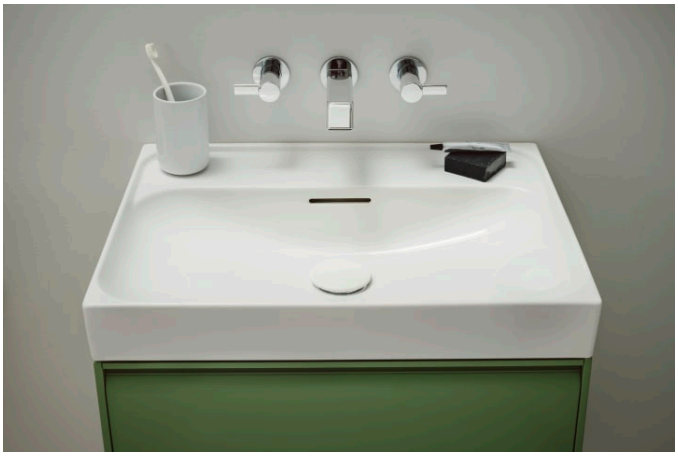



© Copyright 2026, LAUFEN Bathrooms AG | https://www.laufen.com/products/washbasin-H810113...1041?sku=H8101130001041



MEDA

Versatile and timeless. The MEDA collection effortlessly complements any setting, from rental apartment to hotel suite, while reflecting the proven virtues of Swiss design; clarity, functionality and attention to detail. A style emblematic of Swiss designer Peter Wirz and his design firm Vetica.

© Copyright 2026, LAUFEN Bathrooms AG | https://www.laufen.com/products/washbasin-H810113...1041?sku=H8101130001041

SET MEDA

Countertop basin
81011.3



TECHNICAL DATA

Order no.	81011.3
Certified to	EN 31
Dimensions	600 x 460 mm
Inside dimensions of the basin	580 x 325 mm
Basin capacity	6.4 litre (up to bottom line of the overflow)
Specification	Charge 104 – 1 centre tap hole
Special specification	Charge 109 – without tap holes Charge 111 – 1 tap hole, without overflow Charge 112 – without tap hole, without overflow Charge 136 – 3 tap holes, distance 8 inches
Weight	15,1 kg
Accessories excl.	Siphon cover, order no. 81995.1, 81996.3 (3 tap holes not possible) Pedestal, order no. 81995.0, 81996.2
Accessories excl.	Towel rail 550 mm, order no. 38112.3 Towel holder right, order no. 38212.0 Towel holder left, order no. 38212.1
Mounting acc. excl.	Mounting set M10 x 140 mm, order no. 89988.2
Colours	see colour table

SPECIFICATION TEXT

Countertop basin Laufen-MEDA, sanitary ceramic
EN 31
dimensions 600 x 460 mm
1 centre tap hole
Special feature: overflow channel glazed
Further options / accessories: Surface refinement LCC (only white), without tap holes, 1 tap hole/without overflow, without tap hole/overflow, 3 tap holes distance 8 inches, siphon cover, pedestal, bathtubs, furniture
Order no. 81011.3

TECHNICAL DRAWINGS / S 1 : 20

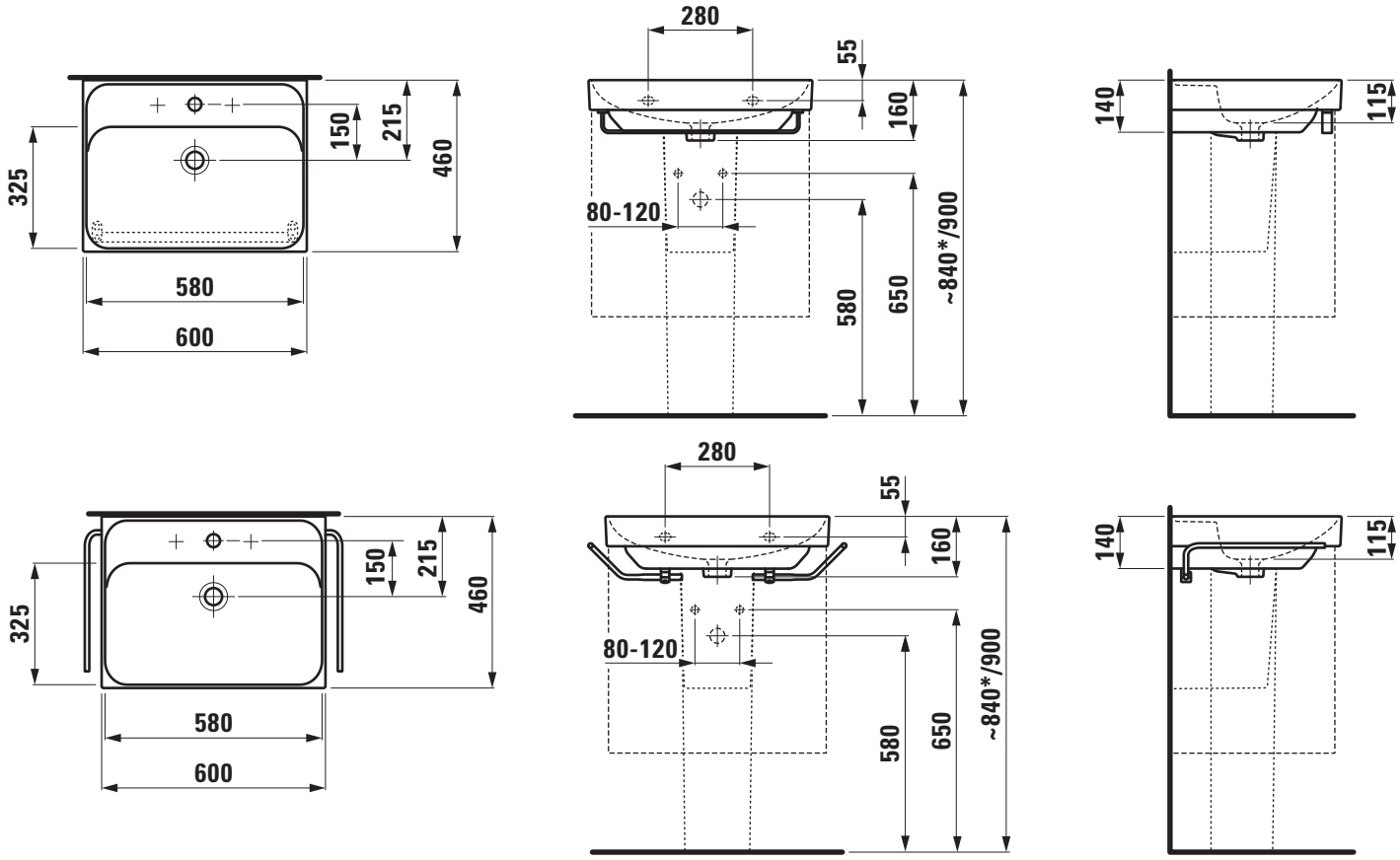

* = Effective height must be fixed according to the height of the pedestal.

LAUFEN

LAUFEN

MEDA

Service

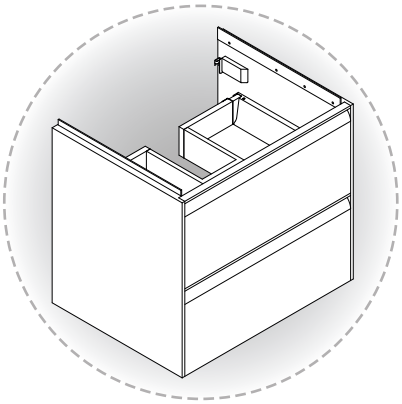

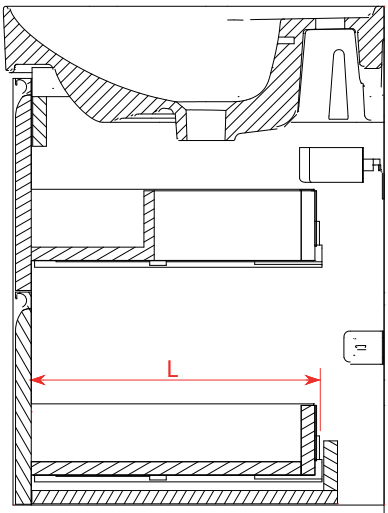

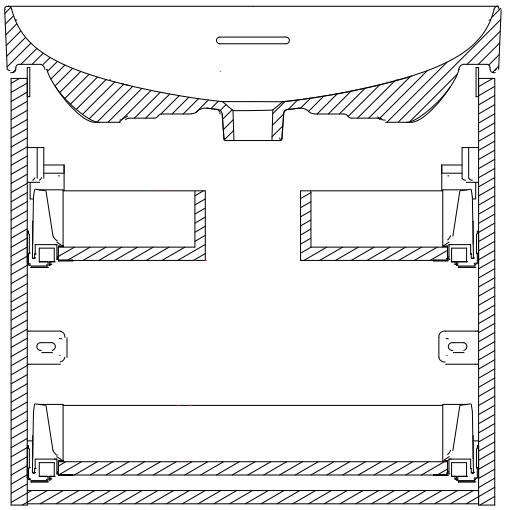

Code vanity unit	"L" in mm	Code runners	Name runners
4.2156.2	350	4.9621.5.000.000.1	Blum Antaro
4.2157.2	350	4.9621.5.000.000.1	Blum Antaro
4.2172.2	350	4.9621.5.000.000.1	Blum Antaro
4.2173.2	350	4.9621.5.000.000.1	Blum Antaro
4.2158.2	350	4.9621.5.000.000.1	Blum Antaro
4.2159.2	350	4.9621.5.000.000.1	Blum Antaro
4.2160.2	350	4.9621.5.000.000.1	Blum Antaro
4.2161.2	350	4.9621.5.000.000.1	Blum Antaro
4.2162.2	350	4.9621.5.000.000.1	Blum Antaro
4.2174.2	350	4.9621.5.000.000.1	Blum Antaro

01/26 4.9864.2.011.000.1

LAUFEN

MEDA

Service

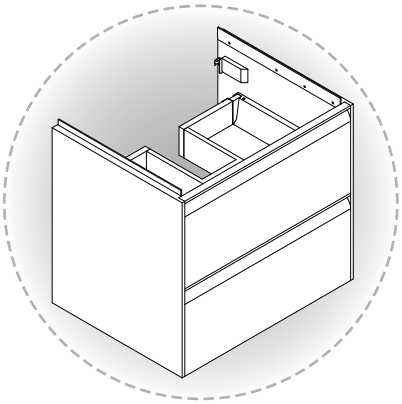

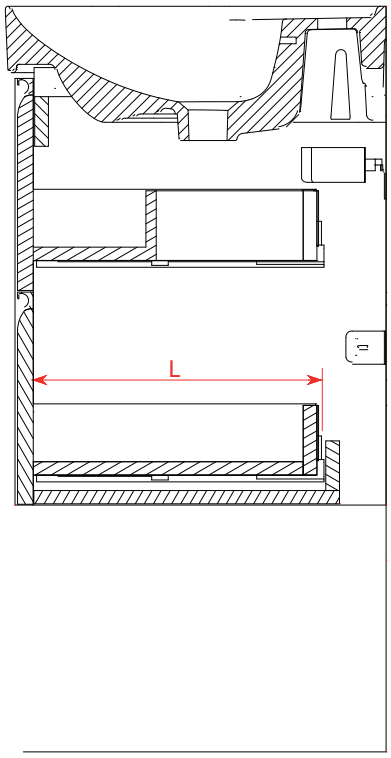

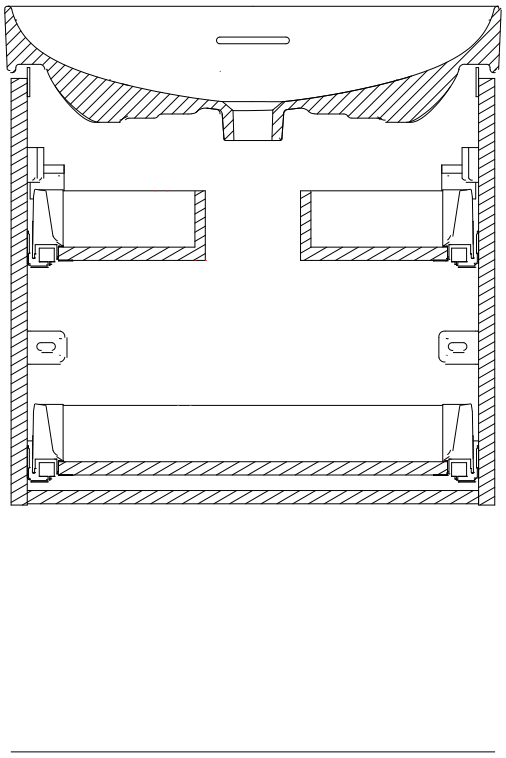

Code vanity unit	"L" in mm	Code runners	Name runners
4.2175.2	350	4.9621.5.000.000.1	Blum Antaro
4.2163.2	350	4.9621.5.000.000.1	Blum Antaro
4.2176.2	350	4.9621.5.000.000.1	Blum Antaro
4.2177.2	350	4.9621.5.000.000.1	Blum Antaro
4.2164.4	350	4.9621.5.000.000.1	Blum Antaro

LAUFEN

MEDA for MARBOND

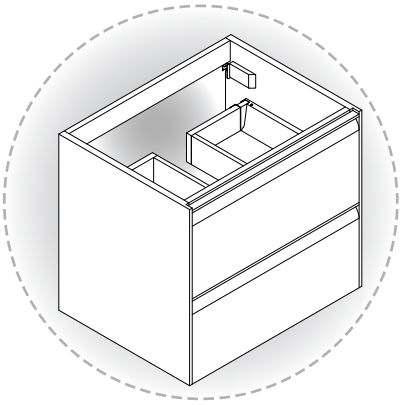

Service

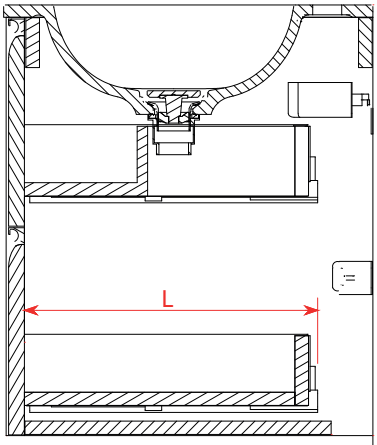

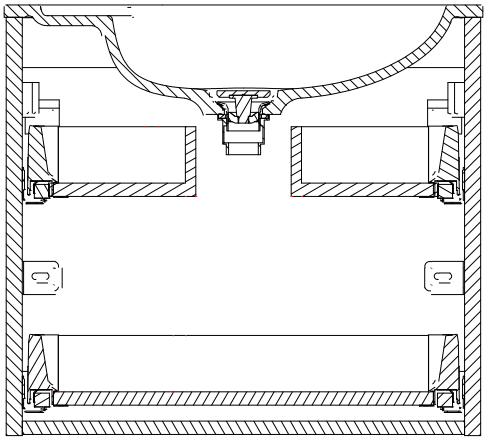

Code vanity unit	"L" in mm	Code runners	Name runners
4.2167.2	350	4.9621.5.000.000.1	Blum Antaro
4.2168.2	350	4.9621.5.000.000.1	Blum Antaro
4.2169.2	350	4.9621.5.000.000.1	Blum Antaro