LAUFEN

REF: H4035321122661



LANI

Vanity unit, 2 drawers, matches vanity washbasin H810083, H817433, H810333

COLOUR AND FINISH

266 Traffic Grey

SPECIFICATION TEXT

Body/Front – 19 mm MDF panels, lacquered or
PVC furniture foil (only 267 – Wild oak)
integrated handles in the front
2 full extension drawers, anthracite
(soft-close mechanism), incl. organiser

MOUNTING ACCESSORIES INCLUDED

Drawer organizer, U-shaped, order no. 496113

MOUNTING ACCESSORIES EXCLUDED

Towel holder chrome plated or lacquered, order no. 493120
Towel rail, anodized aluminium, order no. 490951
Space saving siphon, order no. 894250

Basin position : Central

Closing and opening system : Soft close drawers

Doors and drawers combination : 2 drawers

Furniture configuration : Drawers

Installation type : Wall-hung

Net weight (kg) : 24

© Copyright 2026, LAUFEN Bathrooms AG | https://www.laufen.com/products/vanity-unit-2drawers-matches-vanity-washbasin-h810083h817433h810333-H403532112...1?sku=H4035321122661

TECHNICAL DRAWINGS

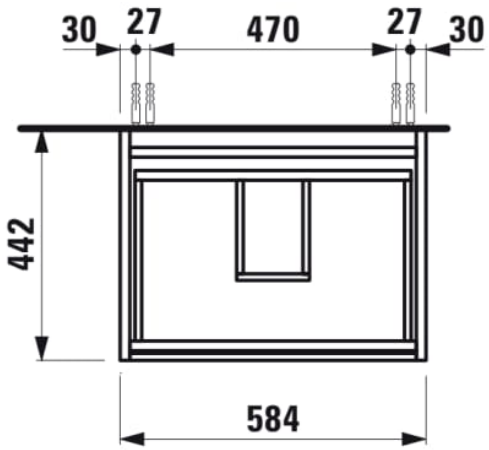

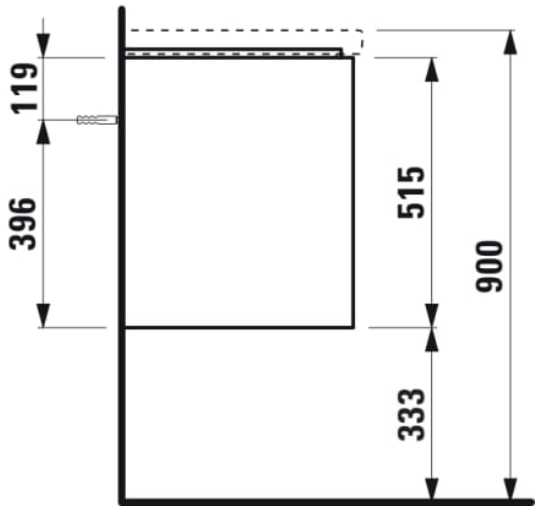

© Copyright 2026, LAUFEN Bathrooms AG | https://www.laufen.com/products/vanity-unit-2drawers-matches-vanity-washbasin-h810083h817433h810333-H403532112...1?sku=H4035321122661

COMPATIBLE WITH



Washbasin

H810333...1041



Combipack wall-hung WC H821331, Silent flush/'rimless', washdown, without flushing rim, incl. seat and cover with lowering system

H866331...0001



Wall-hung WC Silent flush, washdown, without flushing rim

H821331...0001



Wall-hung WC 'rimless', washdown, without flushing rim

H820337...0001



Combipack wall-hung WC H820337, washdown, 'rimless' without flushing rim, incl. seat and cover with lowering system

H866330...0001



Wall-hung WC 'compact', washdown, rimless

H820333...0001



Combipack wall-hung WC H820333 'compact', washdown, rimless, with seat and cover slim with lowering system

H866333...0001



Washbasin

H817433...1041



Washbasin

H810083...1041



Basin mixer, projection 135 mm, fixed spout, Eco+ function, without pop-up waste

H3110810041201



Basin mixer, projection 135 mm, fixed spout, Eco+ function, with pop-up waste

H3110810041241

Towel holder

H493120...0001

© Copyright 2026, LAUFEN Bathrooms AG | https://www.laufen.com/products/vanity-unit-2drawers-matches-vanity-washbasin-h810083h817433h810333-H403532112...1?sku=H4035321122661













© Copyright 2026, LAUFEN Bathrooms AG | https://www.laufen.com/products/vanity-unit-2drawers-matches-vanity-washbasin-h810083h817433h810333-H403532112...1?sku=H4035321122661













© Copyright 2026, LAUFEN Bathrooms AG | https://www.laufen.com/products/vanity-unit-2drawers-matches-vanity-washbasin-h810083h817433h810333-H403532112...1?sku=H4035321122661







© Copyright 2026, LAUFEN Bathrooms AG | https://www.laufen.com/products/vanity-unit-2drawers-matches-vanity-washbasin-h810083h817433h810333-H403532112...1?sku=H4035321122661



LANI

Slim lines, generous storage, and a quiet presence that leaves room for the rituals of everyday life. Created with designer Toan Nguyen, LAUFEN presents a versatile furniture collection featuring considered storage options, premium details and long-lasting, sustainable design.

© Copyright 2026, LAUFEN Bathrooms AG | https://www.laufen.com/products/vanity-unit-2drawers-matches-vanity-washbasin-h810083h817433h810333-H403532112...1?sku=H4035321122661

LANI FURNITURE

Vanity unit
403532



TECHNICAL DATA

Order no.	403532 / 2 drawers
Dimensions (WxHxD)	584 x 515 x 448 mm
Matching for	washbasin Lua, order no. 810083, Living, order no. 817433, Kartell • LAUFEN, order no. 810333
Specification	Body/Front – 19 mm MDF panels, lacquered or PVC furniture foil (only 267 – Wild oak) integrated handles in the front 2 full extension drawers, anthracite (soft-close mechanism), incl. organizer
Weight	24,0 kg
Accessories incl.	Drawer organizer, U-shaped, order no. 496113
Accessories excl.	Towel holder chrome plated or lacquered, order no. 493120 Towel rail, anodized aluminium, order no. 490951 Space saving siphon, order no. 894250
Mounting acc. incl.	Installation set for furniture, order no. 493133

Mounting information	The walls installed on must meet the requirements of the furniture in terms of weight and the supplied fastening elements. If this cannot be guaranteed another method of installation needs to be chosen.
Colours Body/Front	260 – White matt 261 – White glossy 266 – Traffic grey 267 – Wild oak 990 – Specialcolor lacquered selection 999 – Multicolor lacquered selection
Colours Towel holder	
order no. 493120	004 – Chrome plated 268 – White matt 450 – Black matt
order no. 490951	104 – Aluminium glossy 105 – Aluminium 106 – Aluminium black

TECHNICAL DRAWINGS / S 1 : 20

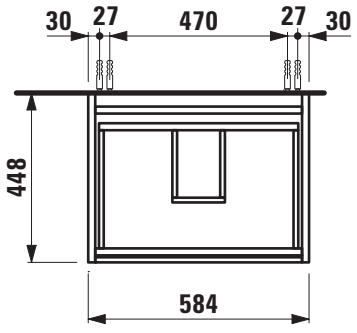

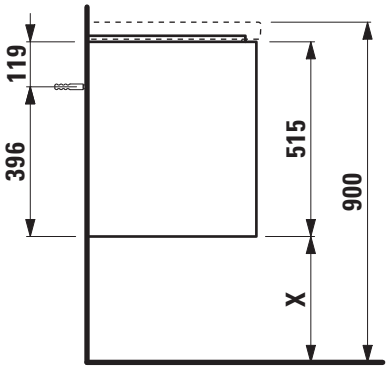

X = The exact height must be set during installation.

LAUFEN

REF: H8100830001041



LUA

Washbasin

COLOUR AND FINISH

000 White

OPTIONS

104 - one tap hole, centre

Basin capacity (l) : 0
Bowl depth (mm) : 135
Bowl length (mm) : 560
Bowl position : Central
Bowl width (mm) : 315

Fastening Distance (inch) : 11.02
Fastening Distance (mm) : 280
Installation type : Wall-hung
Internal Shape : Oval
Material : Ceramics

Net weight (kg) : 14.4
Shape : Rectangular
Taphole configuration : 1 taphole in the middle

TECHNICAL DRAWINGS

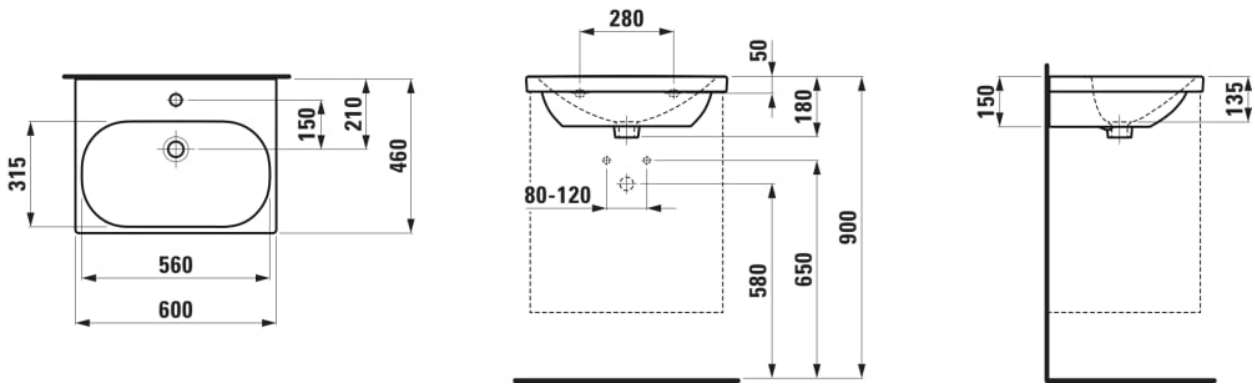

© Copyright 2026, LAUFEN Bathrooms AG | https://www.laufen.com/products/washbasin-H810083...1041?sku=H8100830001041

COMPATIBLE WITH



Basin mixer, projection 135 mm, fixed spout, Eco+ function, without pop-up waste

H3110810041201



Basin mixer, projection 135 mm, fixed spout, Eco+ function, with pop-up waste

H3110810041241



Vanity unit, 2 drawers, matches vanity washbasin H810083, H817433, H810333

H403532112...1



LANI Towel frame 600 x 420 for washbasins Kartell • LAUFEN, MEDA, LUA, LAUFEN PRO S

H386961...0001



Towel holder lateral, right

H382122...0001



Towel holder lateral, left

H382123...0001



Towel holder Reling for washbasins 600 mm

H381123...0001





© Copyright 2026, LAUFEN Bathrooms AG | https://www.laufen.com/products/washbasin-H810083...1041?sku=H8100830001041







© Copyright 2026, LAUFEN Bathrooms AG | https://www.laufen.com/products/washbasin-H810083...1041?sku=H8100830001041



LUA

A design language reduced to the essentials: clear, geometric lines united in a continuous form. LUA offers a versatile bathroom collection for both private and public spaces. With extensive washbasin and WC options, coordinated faucets and statement bathtubs, all complemented by the LANI furniture range, the collection delivers a complete bathroom solution with enduring appeal.

© Copyright 2026, LAUFEN Bathrooms AG | https://www.laufen.com/products/washbasin-H810083...1041?sku=H8100830001041

SET LUA

Countertop basin
81008.3



TECHNICAL DATA

Order no.	81008.3
Certified to	EN 31
Dimensions	600 x 460 mm
Inside dimensions of the basin	560 x 315 mm
Basin capacity	5.7 litre (up to bottom line of the overflow)
Specification	Charge 104 – 1 centre tap hole
Special specification	Charge 109 – without tap holes Charge 136 – 3 tap holes, distance 8 inches Charge 142 – without tap hole, without overflow and without open drain Charge 156 – 1 centre tap hole, without overflow and without open drain
Weight	15,0 kg
Mounting acc. excl.	Mounting set M10 x 140 mm, order no. 89988.2
Colours	see colour table

SPECIFICATION TEXT

Countertop basin Laufen-LUA, sanitary ceramic
EN 31
dimensions 600 x 460 mm
1 centre tap hole
Special feature: overflow channel glazed
Further options / accessories: Surface refinement LCC (only white), without tap holes, 3 tap holes distance 8 inches, without tap hole/overflow and open drain, 1 tap hole/without overflow and open drain, bathtubs, furniture
Order no. 81008.3

TECHNICAL DRAWINGS / S 1 : 20

