PRO S

# Shower tray, made of Marbond composite material, rectangular, linear outlet at short side

COLOUR AND FINISH

000 White

OPTIONS

000 - standard option

SPECIFICATION TEXT

Rectangular shower tray made of Marbond (Gel Coat surface matt, with structure) with Antislip, Class C (DIN 51097).
Removable siphon cover, Marbond for floor-even installation or on floor installation.

MOUNTING ACCESSORIES EXCLUDED

Linear siphon for Laufen Pro S shower trays with water trap height of 30 mm, order no. H290182 with water trap height of 50 mm, order no. H290183
Installation frame, adjustable height between 85-160 mm, order no. H298442
Antinoise set for the frame installation to fulfil DIN 4109 and SIA 181, order no. H298989
3-D sealing tape: Sealing set 3,0 m, for sealed sides ≤ 3 m, includes 1 sealing tape (width 120 mm, length 3 m), 3-D inside corner for sealing (1 piece) and 2x 3 rm antinoise tape (width 30 mm), order no. H295642
Additional sealing set 2,0 m, for sealed sides ≥ 3 m, order no. H295647
3-D sealing corners: inside corner, 1 piece, order no. H295643, outside corner for floor-even installation, set 3 parts, order no. H295644
Dispersion sealing composition, tube 500 ml, order no. H295645
Noise control band, order no. H295551

Depth : Superslim (less than 45mm)
Material : Marbond
Shape : Rectangular
Installation type : Built-in, Corner
Net weight (kg) : 68.4

© Copyright 2026, LAUFEN Bathrooms AG | https://www.laufen.com/products/shower-tray-made-marbond-composite-material-rectangular-linear-outlet-short-side-H210184...0001?sku=H2101840000001

TECHNICAL DRAWINGS

## Laufen Pro S Marbond
## H210180 / Data: 16.11.2021

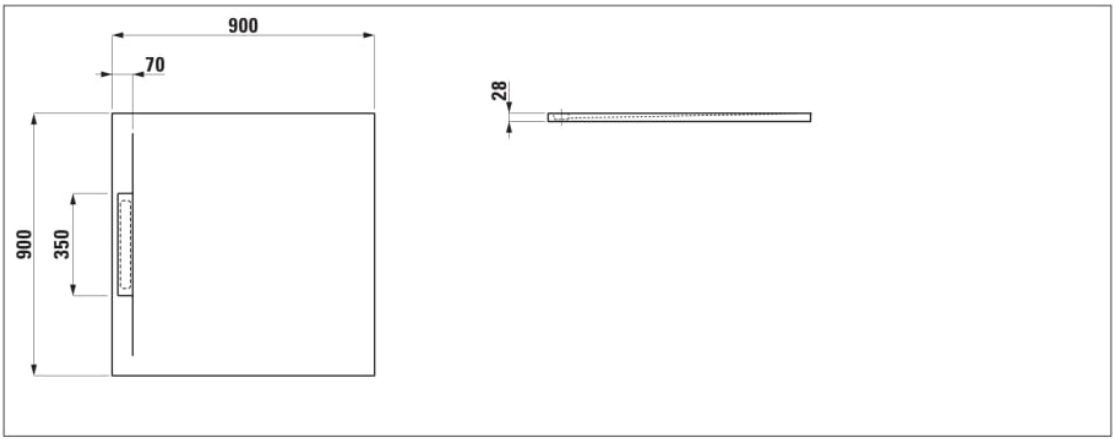


## H210181 / Data: 16.11.2021

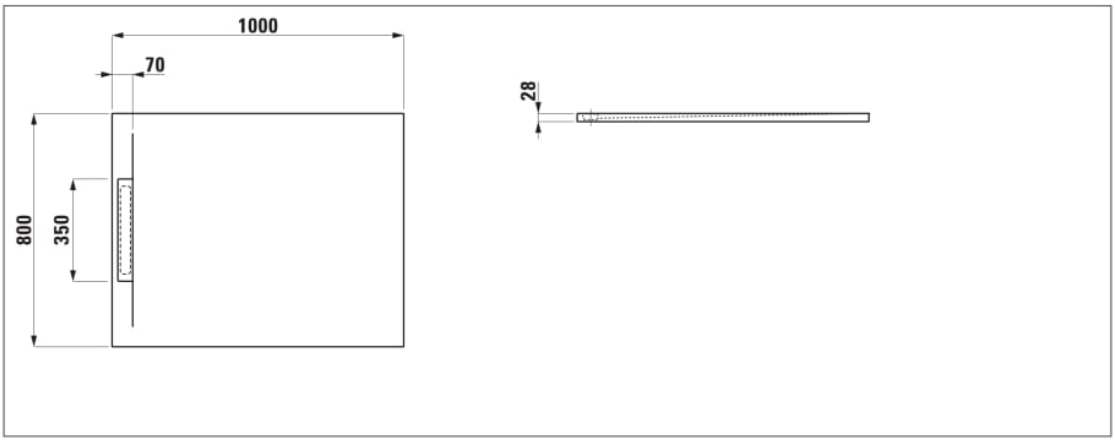


## H210182 / Data: 16.11.2021

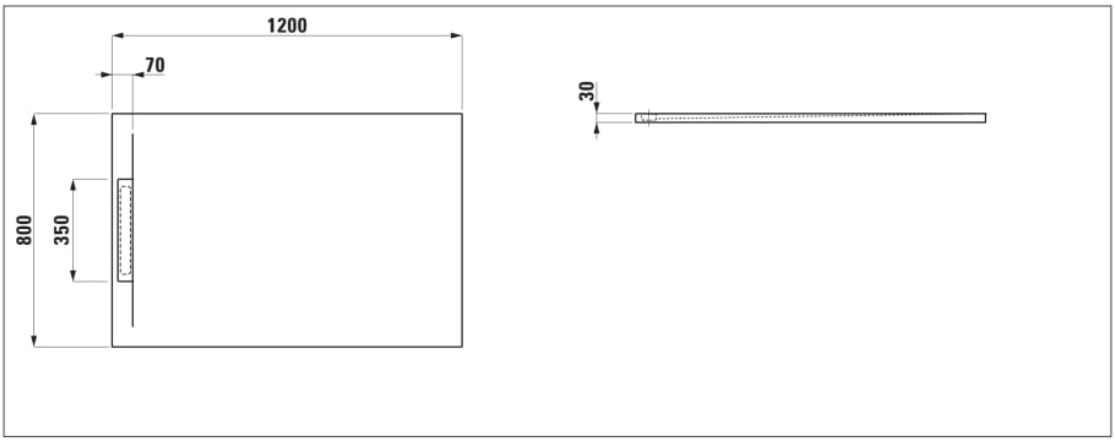


© Copyright 2026, LAUFEN Bathrooms AG | https://www.laufen.com/products/shower-tray-made-marbond-composite-material-rectangular-linear-outlet-short-side-H210184...0001?sku=H2101840000001

## COMPATIBLE WITH

Linear siphon for PRO S shower trays with water trap height of 30 mm

**H290182**0000001

Linear siphon for PRO S shower trays with water trap height of 50 mm

**H290183**0000001

Installation frame for Marbond shower tray

**H295738**0000001

3D inside corner with insulation for sealing

**H295643**0000001

Dispersion adhesive for sealing tape or 3D corner

**H295645**0000001

Sealing tape 2m

**H295647**0000001

© Copyright 2026, LAUFEN Bathrooms AG | https://www.laufen.com/products/shower-tray-made-marbond-composite-material-rectangular-linear-outlet-short-side-H210184...0001?sku=H2101840000001

© Copyright 2026, LAUFEN Bathrooms AG | https://www.laufen.com/products/shower-tray-made-marbond-composite-material-rectangular-linear-outlet-short-side-H210184...0001?sku=H2101840000001

## PRO S

With great sensitivity, designer Peter Wirz of Vetica Design has evolved the LAUFEN PRO concept into a slimmer, more geometric form. Defined by precise radii and a light silhouette, LAUFEN PRO S unites elegance with everyday functionality, bringing premium design within reach while combining effortlessly with existing pieces from the LAUFEN PRO collection.

© Copyright 2026, LAUFEN Bathrooms AG | https://www.laufen.com/products/shower-tray-made-marbond-composite-material-rectangular-linear-outlet-short-side-H210184...0001?sku=H2101840000001

#material_text

MARBOND

## Marbond

Marbond is a composite material made of two layers which are extremely well connected with each other: The basis is formed by a high-quality mineral casting material, the surface is coated with a two millimetre thick acrylic layer. Marbond is hygienic, easy to clean, temperature resistant according to EN 263 and anti-slip (class C).

© Copyright 2026, LAUFEN Bathrooms AG | https://www.laufen.com/products/shower-tray-made-marbond-composite-material-rectangular-linear-outlet-short-side-H210184...0001?sku=H2101840000001