PRO S

Shower tray, made of Marbond composite material, square, linear outlet at short side

COLOUR AND FINISH

000 White

OPTIONS

000 - standard option

SPECIFICATION TEXT

Square shower tray made of Marbond (Gel Coat surface matt, with structure) with Antislip, Class C (DIN 51097).
Removable siphon cover, Marbond for floor-even installation or on floor installation.

MOUNTING ACCESSORIES EXCLUDED

Linear siphon for Laufen Pro S shower trays with water trap height of 30 mm, order no. H290182 with water trap height of 50 mm, order no. H290183Installation frame, adjustable height between 85-175 mm, order no. 29572.2
Antinoise set for the frame installation to fulfil, DIN 4109 and SIA 181, order no. H298990
3-D sealing tape: Sealing set 3,0 m, for sealed sides ≤ 3 m, includes 1 sealing tape (width 120 mm, length 3 m), 3-D inside corner for sealing (1 piece) and 2x 3 rm antinoise tape (width 30 mm), order no. H295642
Additional sealing set 2,0 m, for sealed sides ≥ 3 m, order no. H295647
3-D sealing corners: Inside corner, 1 piece, order no. H295643, outside corner for floor-even installation, set 3 parts, order no. H295644
Dispersion sealing composition, tube 500 ml, order no. H295645
Noise control band, order no. H295551

Depth : Superslim (less than 45mm)
Material : Marbond
Shape : Square
Installation type : Built-in, Corner
Net weight (kg) : 37.8

© Copyright 2026, LAUFEN Bathrooms AG | https://www.laufen.com/products/shower-tray-made-marbond-composite-material-square-linear-outlet-short-side-H210180...0001?sku=H2101800000001

TECHNICAL DRAWINGS

Laufen Pro S Marbond
H210180 / Data: 16.11.2021

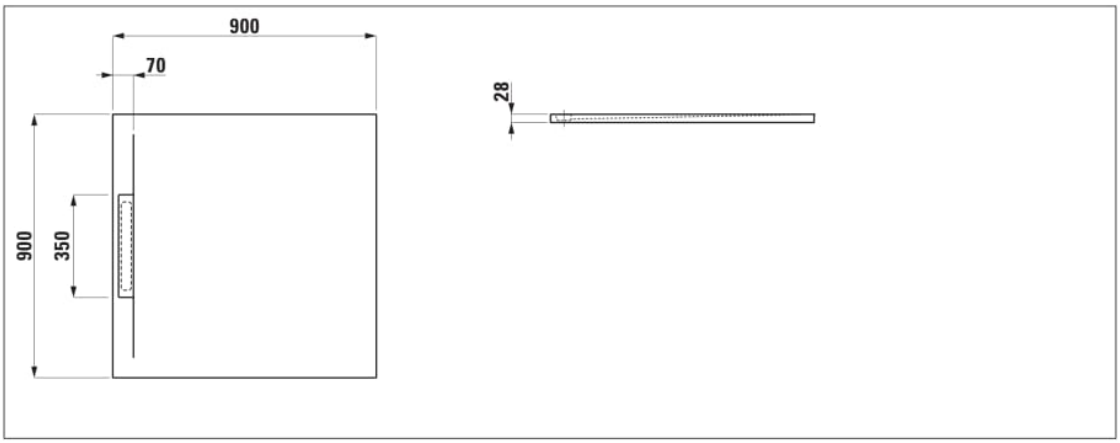

H210181 / Data: 16.11.2021

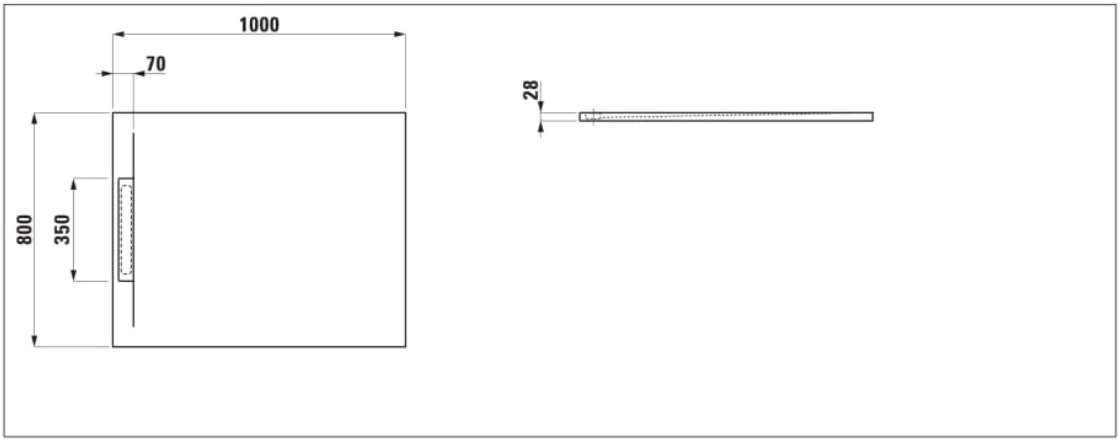

H210182 / Data: 16.11.2021

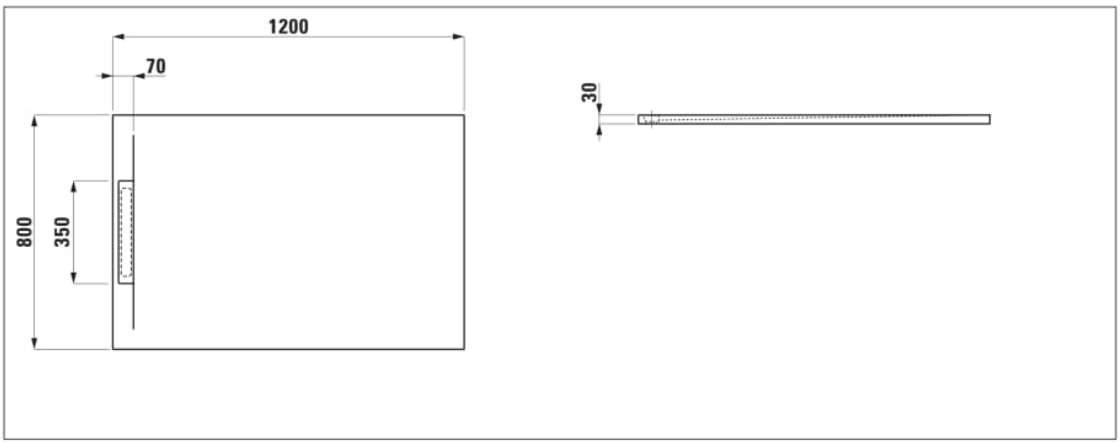

© Copyright 2026, LAUFEN Bathrooms AG | https://www.laufen.com/products/shower-tray-made-marbond-composite-material-square-linear-outlet-short-side-H210180...0001?sku=H2101800000001

COMPATIBLE WITH

Linear siphon for PRO S shower trays with water trap height of 30 mm

H2901820000001

Linear siphon for PRO S shower trays with water trap height of 50 mm

H2901830000001

Installation frame for Marbond shower tray

H2957250000001

3D inside corner with insulation for sealing

H2956430000001

Dispersion adhesive for sealing tape or 3D corner

H2956450000001

Sealing tape 2m

H2956470000001

© Copyright 2026, LAUFEN Bathrooms AG | https://www.laufen.com/products/shower-tray-made-marbond-composite-material-square-linear-outlet-short-side-H210180...0001?sku=H2101800000001

PRO S

With great sensitivity, designer Peter Wirz of Vetica Design has evolved the LAUFEN PRO concept into a slimmer, more geometric form. Defined by precise radii and a light silhouette, LAUFEN PRO S unites elegance with everyday functionality, bringing premium design within reach while combining effortlessly with existing pieces from the LAUFEN PRO collection.

© Copyright 2026, LAUFEN Bathrooms AG | https://www.laufen.com/products/shower-tray-made-marbond-composite-material-square-linear-outlet-short-side-H210180...0001?sku=H2101800000001

#material_text

MARBOND

Marbond

Marbond is a composite material made of two layers which are extremely well connected with each other: The basis is formed by a high-quality mineral casting material, the surface is coated with a two millimetre thick acrylic layer. Marbond is hygienic, easy to clean, temperature resistant according to EN 263 and anti-slip (class C).

© Copyright 2026, LAUFEN Bathrooms AG | https://www.laufen.com/products/shower-tray-made-marbond-composite-material-square-linear-outlet-short-side-H210180...0001?sku=H2101800000001

LAUFEN

REF: H2901830000001

PRO S

Linear siphon for PRO S shower trays with water trap height of 50 mm

OPTIONS

000 - standard option

Net weight (kg) : 0.57

© Copyright 2026, LAUFEN Bathrooms AG | https://www.laufen.com/products/linear-siphon-pro-s-shower-trays-water-trap-height-50mm-H2901830000001?sku=H2901830000001