ONA

Unik (compact base unit with one door and basin)

DIMENSIONS

Length	450 mm
Width	260 mm
Height	645 mm

COLOURS AND FINISHES

511 Dark Elm

PRICE (VAT INCLUDED)

£733.49

TECHNICAL DRAWINGS

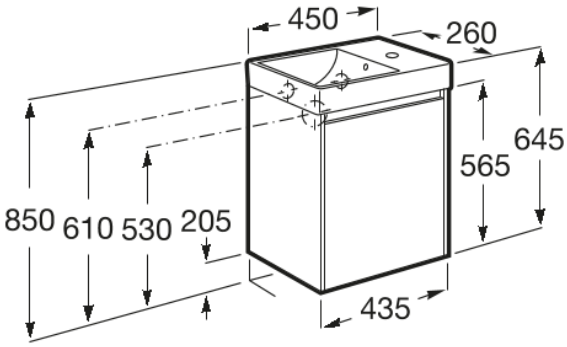

FEATURES

Base unit / Closing and opening system: Soft close doors

Base unit / Door type: Hinged

Base unit / Doors and drawers combination: 1 door

Base unit / Structure: Doors

Basin / Taphole configuration: 1 taphole in the middle

Basin Position: Right

Basin shape: Square

Dimensions / Basin and base unit / Height (mm): 645

Dimensions / Basin and base unit / Length (mm): 450

Dimensions / Basin and base unit / Width (mm): 260

Installation type: Wall-hung

Material / Base unit: MDF

Material / Basin: FINECERAMIC ®

Tap installation: On the basin

Base unit / Right hand opening

© Copyright 2026, Roca Sanitario, S.A. - All rights reserved | 23-10-2026 | https://www.uk.roca.com/products/unik-compact-base-unit-one-door-basin-851678...?sku=A851678511

BOUGHT TOGETHER FREQUENTLY

Column unit

857635...

Column unit

857636...

Shelf unit with door

857637...

Basin mixer smooth body with click clack waste, Cold Start

5A3A9E..0

Basin mixer medium height smooth body with click clack waste, Cold Start

5A3C9E..0

© Copyright 2026, Roca Sanitario, S.A. - All rights reserved | 23-10-2026 | https://www.uk.roca.com/products/unik-compact-base-unit-one-door-basin-851678...?sku=A851678511

Ona

Simple as nature. Ona pays homage to the diverse shapes of nature from our native Mediterranean. It is functional without ever appearing cold, with crisp aesthetics that follow the inherent warmth of the natural environment, made for those who enjoy the power of silent landscapes.

INSTALLATION AND USER MANUALS

User manual

© Copyright 2026, Roca Sanitario, S.A. - All rights reserved | 23-10-2026 | https://www.uk.roca.com/products/unik-compact-base-unit-one-door-basin-851678...?sku=A851678511