# PRODUCT DATA SHEET

crosswater

## PRODUCT CODE

CRQ900X900W

## RANGE

25mm Creo

## DESCRIPTION

Creo Quadrant Shower Tray 900 x 900 25mm

**WEBSITE LINK** Click Here

| | |
|---|---|
| **CATEGORY** | Showering |
| **WARRANTY DETAILS** | Lifetime |
| **COLOUR** | Gloss White |
| **FINISH APPLICATION** | Gelcoat/Nanocoat |
| **PRIMARY MATERIAL** | Engineered Stone |
| **INSTALL TYPE** | Floor Mounted |
| **PRODUCT WIDTH MM** | 900 |
| **PRODUCT HEIGHT MM** | 25 |
| **PRODUCT LENGTH MM** | 900 |
| **PRODUCT NET WEIGHT KG** | 20.84 |

| | |
|---|---|
| **STANDARDS** | EN 14527:2016+A1:2018 |
| **WASTE INCLUDED** | No |
| **WASTE WATER FLOW RATE LPM** | 30 |
| **OUTER EDGE DIMENSION - TRAYS (MM)** | 60 |
| **WASTE LOCATION** | Center |
| **ANTI-SLIP CLASS** | Class A DIN 51097 |
| **WASTE SHAPE** | Circular |
| **DRYING AREA** | No |
| **RISER KIT COMPATIBLE** | Yes |
| **RISER KIT INCLUDED** | No |
| **TRAY PLANE TOLERANCE (MM)** | +2/-2 mm |
| **TRAY WIDTH TOLERANCE MM** | +5/0 mm |
| **TRAY LENGTH TOLERANCE MM** | +5/0 mm |
| **TRAY HEIGHT TOLERANCE MM** | +2/-2 mm |
| **TRAY WASTE HOLE TOLERANCE MM** | +1/-1 mm |
| **WASTE HOLE DIAMETER (MM)** | 90 |
| **COLOUR CODE / REFERENCE** | RAL 9016 |

## TECHNICAL DIMENSIONS

Dimensions in mm unless otherwise specified.

Tolerances (per material type) apply.

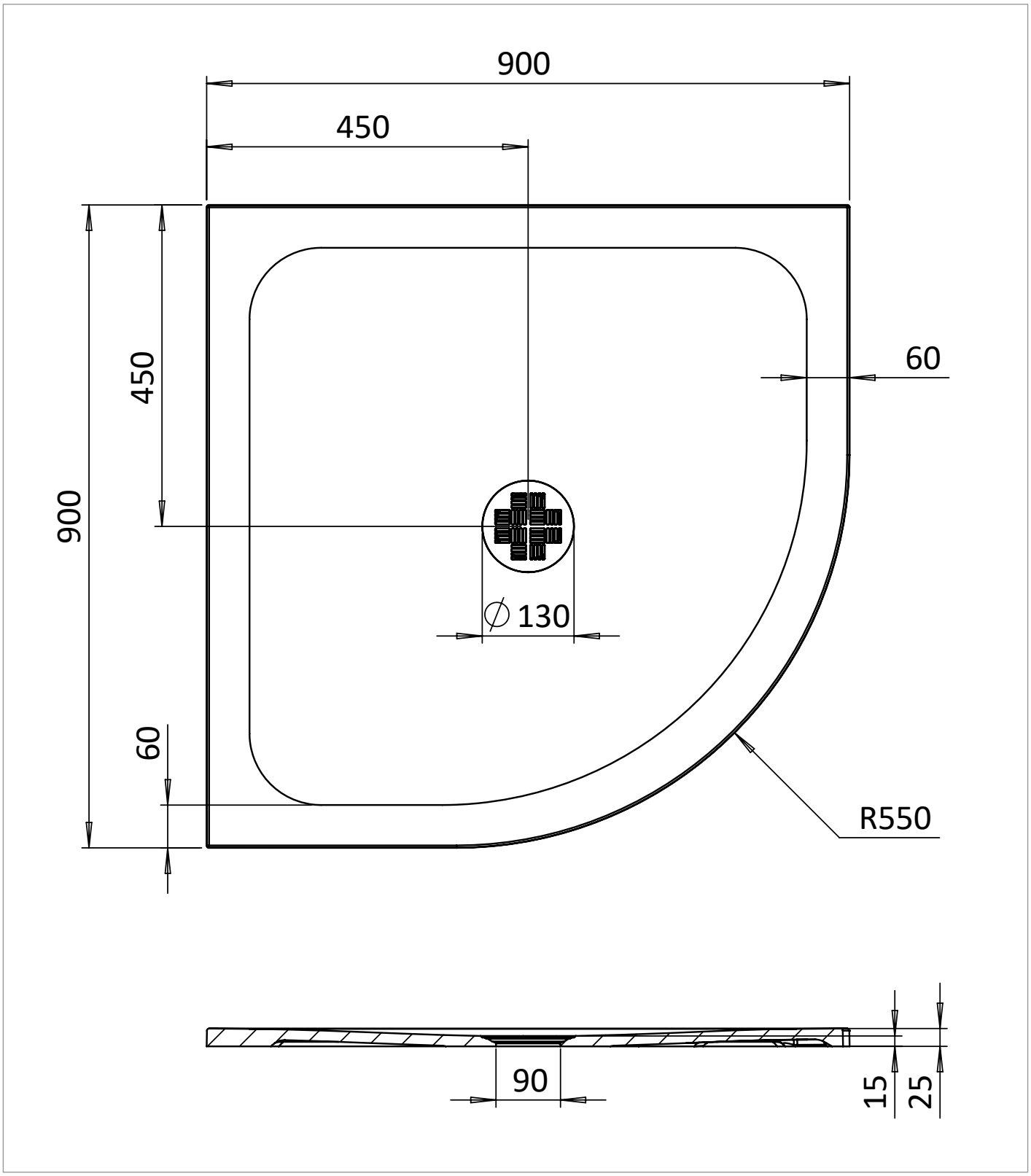

## SPARES LIST

Only the parts labelled are available as spares.

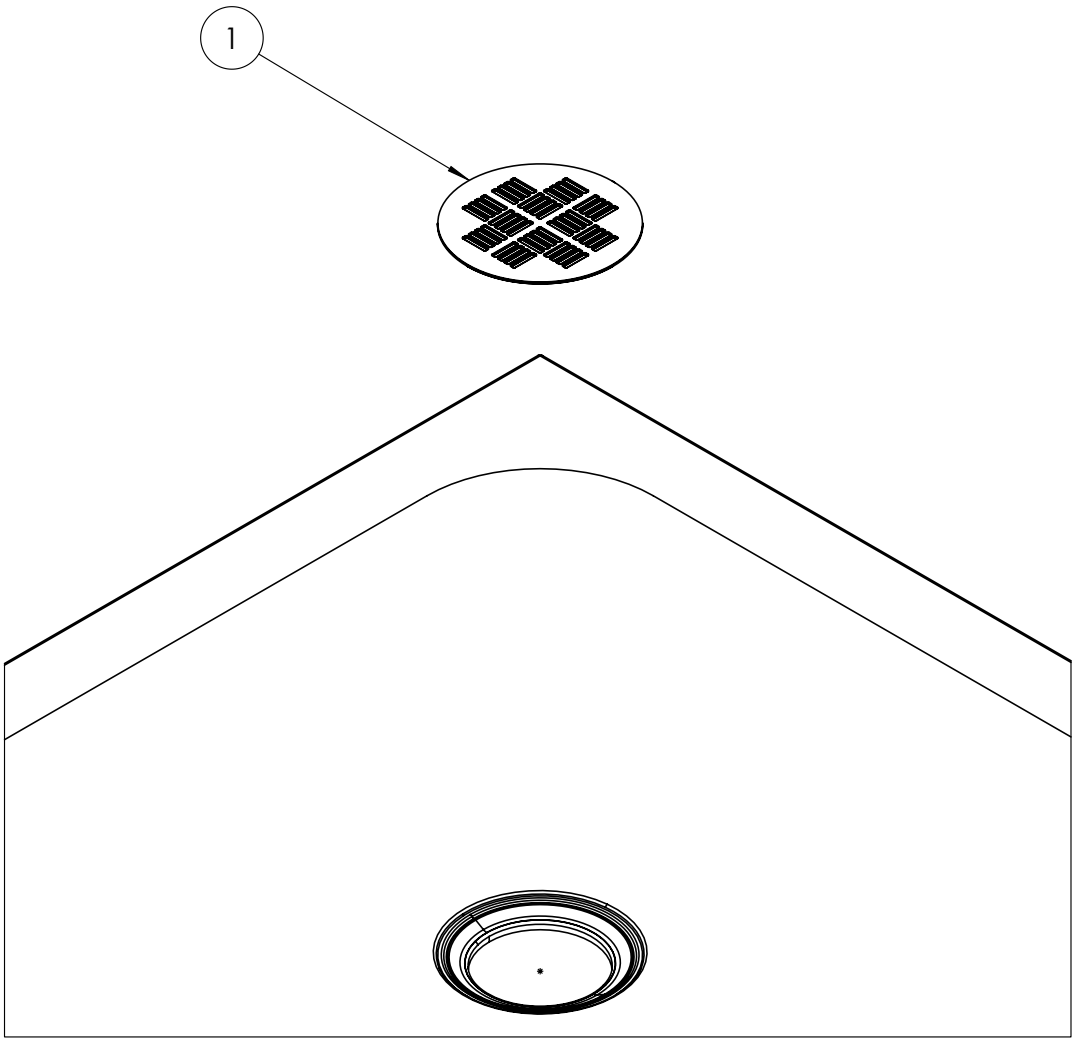


| NUMBER | PART CODE | DESCRIPTION |
|---|---|---|
| 1 | CREOWASTEW | Creo Shower Waste Cover White |
| | MINERALPOLISH | Cast Mineral Marble Polishing Compound |
| | MINERALREPAIRKITWG | Cast Mineral Marble Repair Kit White Gloss |
| | MINERALTOUCHKITWG | Cast Mineral Marble Touch Up Kit White Gloss |

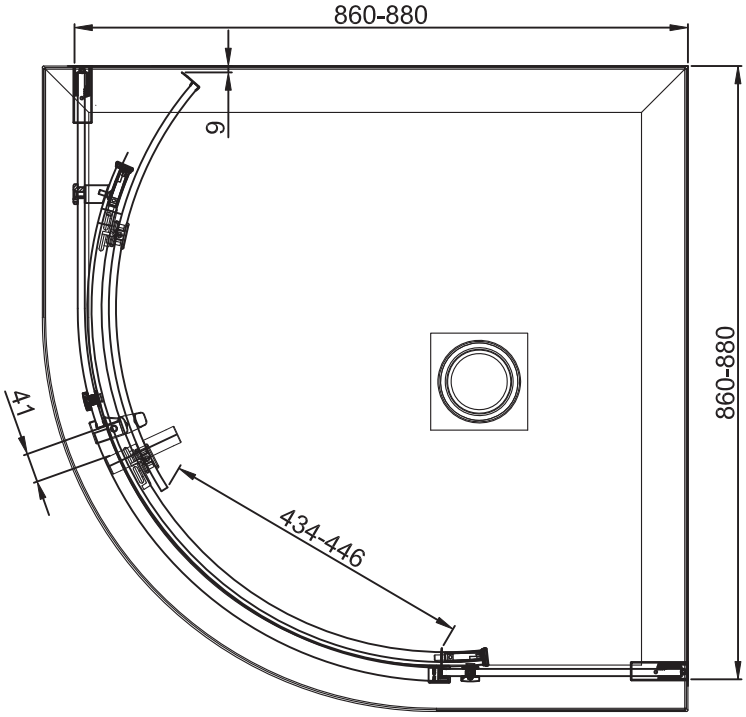


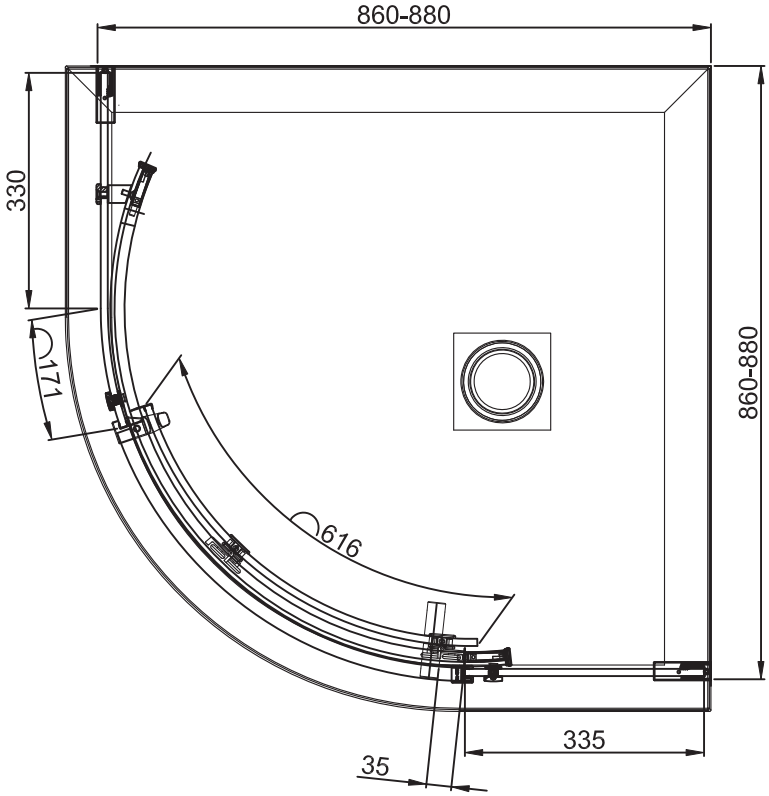


Height: 2000mm

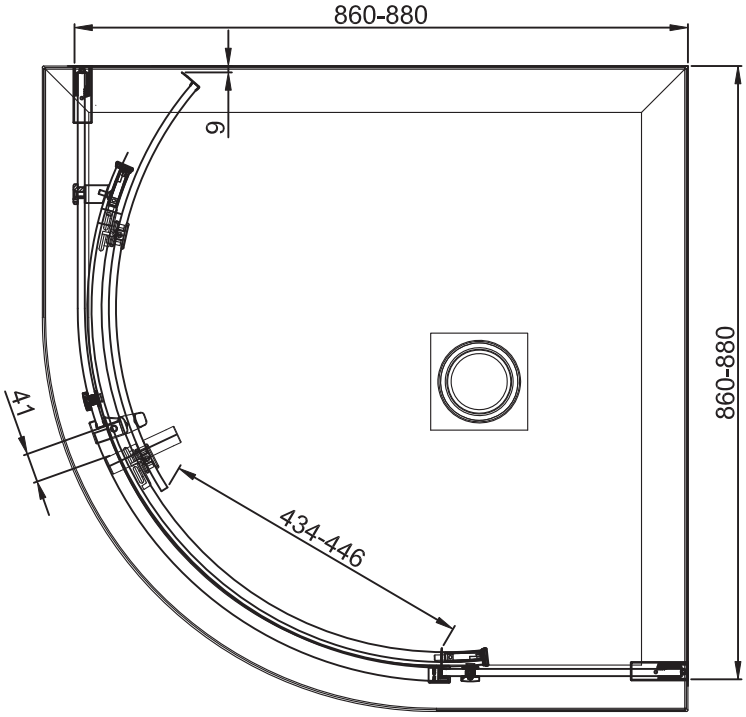


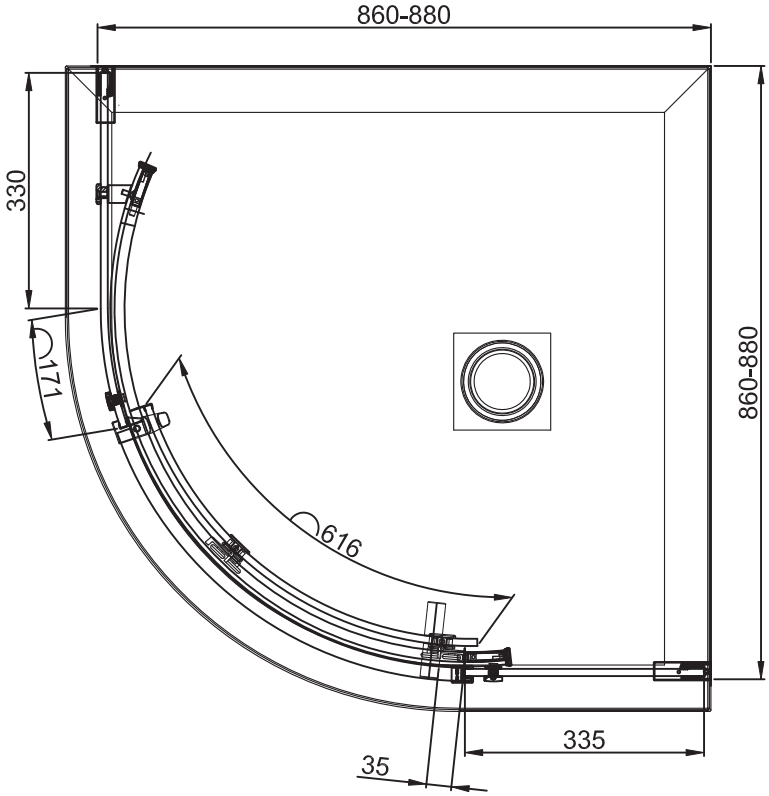


Height: 2000mm

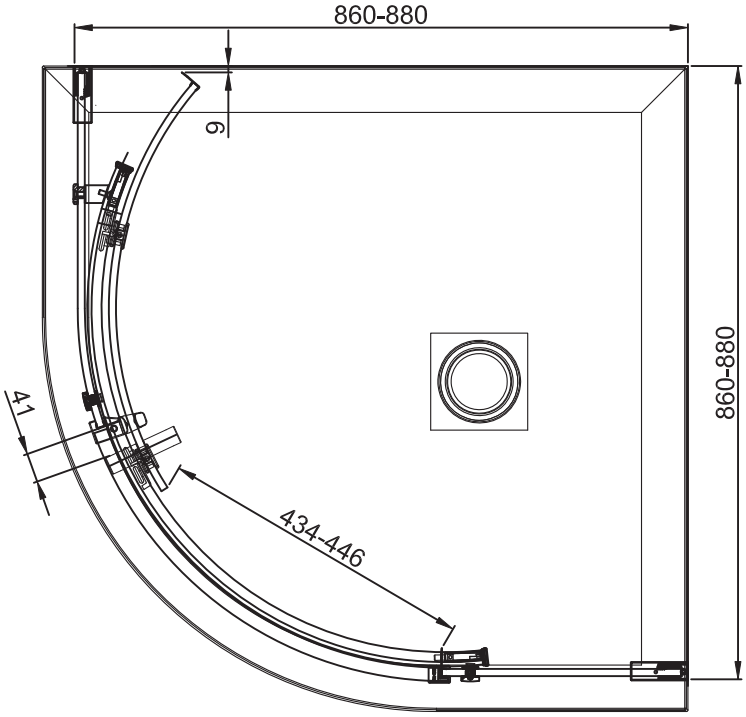


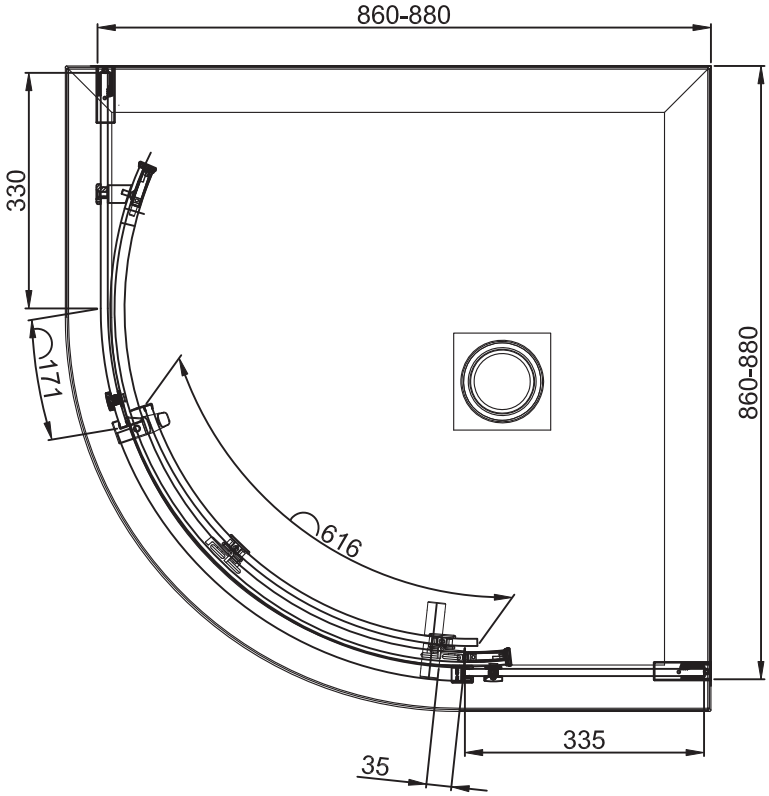


Height: 2000mm

# PRODUCT DATA SHEET

## PRODUCT CODE
CRHFWS90

## RANGE
25mm Creo

## DESCRIPTION
Creo Shower Tray Waste 90mm

**WEBSITE LINK** Click Here

| | |
|---|---|
| **CATEGORY** | Showering |
| **WARRANTY DETAILS** | 2 Years |
| **COLOUR** | White |
| **FINISH APPLICATION** | Raw/Natural |
| **PRIMARY MATERIAL** | NEOPRENE |
| **PRODUCT WIDTH MM** | 112 |
| **PRODUCT HEIGHT MM** | 90 |
| **PRODUCT NET WEIGHT KG** | 0.2 |

| | |
|---|---|
| **STANDARDS** | EN274 |
| **WASTE WATER FLOW RATE LPM** | 24 |
| **WASTE SHAPE** | Circular |

## TECHNICAL DIMENSIONS

Dimensions in mm unless otherwise specified.

Tolerances (per material type) apply.

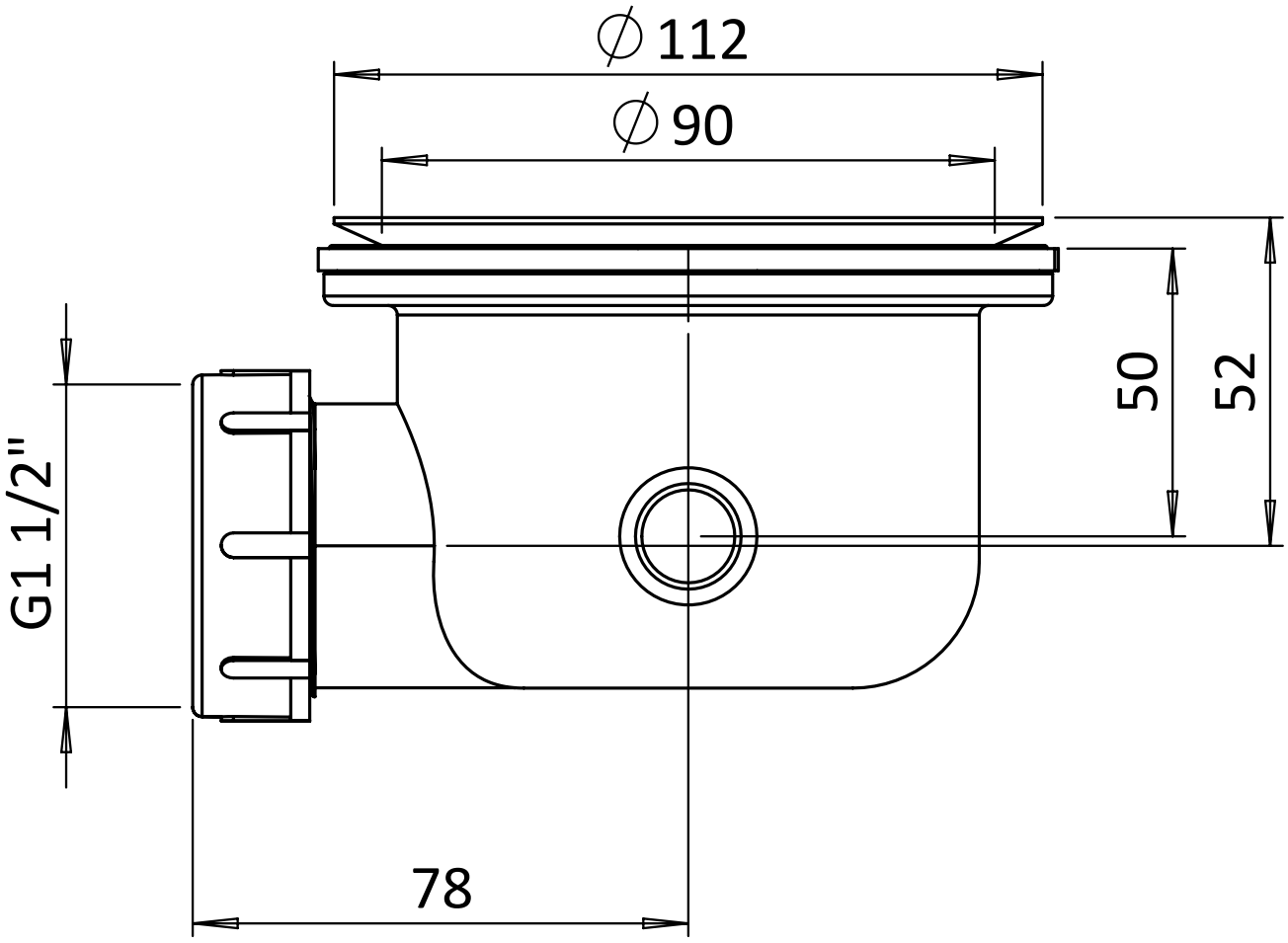

## SPARES LIST

Only the parts labelled are available as spares.

NO SPARES AVAILABLE