PRODUCT DATA SHEET

PRODUCT CODE
MOD440R

RANGE
Module

DESCRIPTION
Module 2D Outlet Valve With Outlet For Bath Spout & Handshower

WEBSITE LINK Click Here

CATEGORY	Brassware
WARRANTY DETAILS	15 Years
FINISH APPLICATION	Raw/Natural
PRIMARY MATERIAL	Brass
INSTALL TYPE	Wall Mounted
PRODUCT WIDTH MM	401
PRODUCT HEIGHT MM	119
PRODUCT NET WEIGHT KG	4.5
MINIMUM PRESSURE (BAR)	1
MAX WORKING PRESSURE (BAR)	5

STANDARDS	EN 1111:2017
APPROVAL	2304701
NUMBER OF OUTLETS	2
NUMBER OF FUNCTIONS	2
HEADWORK	Thermo cartridge + flow control/s
INLET CONNECTIONS THREAD	G3/4”
OUTLET CONNECTIONS THREAD	G3/4”
WASTE INCLUDED	No
ANTI-SCALD PROTECTION	Yes
ENERGY SAVING	No

PRESSURE (BAR)	**0.2**	**0.5**	**1**	**2**	**3**	**4**	**5**
PRIMARY FLOWRATE			11.702	17	21	24	26.7
HANDSET FLOWRATE			6	8.5	10.7	12.3	13.8
MASSAGE FLOW RATE							
AIR FLOW RATE							
WIRE FLOW RATE							
WATERFALL FLOW RATE							
MIST FLOW RATE							
HANDSPRAY FLOW RATE							

Part of the
Bathroom Brands Group

TECHNICAL DIMENSIONS

Dimensions in mm unless otherwise specified.

Tolerances (per material type) apply.

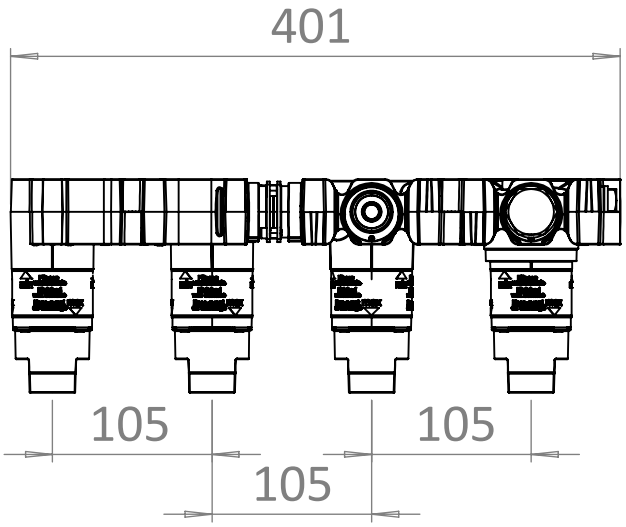

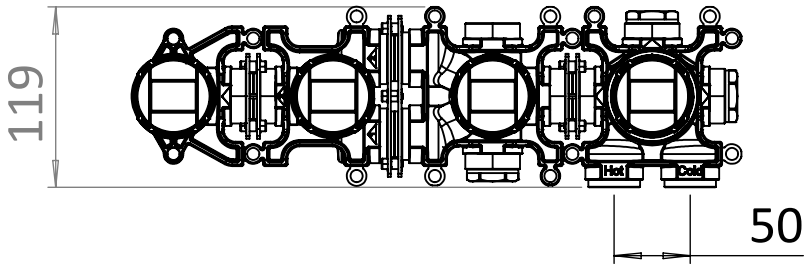

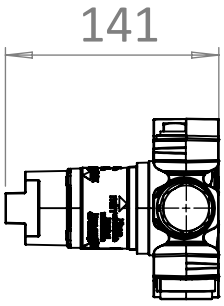

SPARES LIST

Only the parts labelled are available as spares.

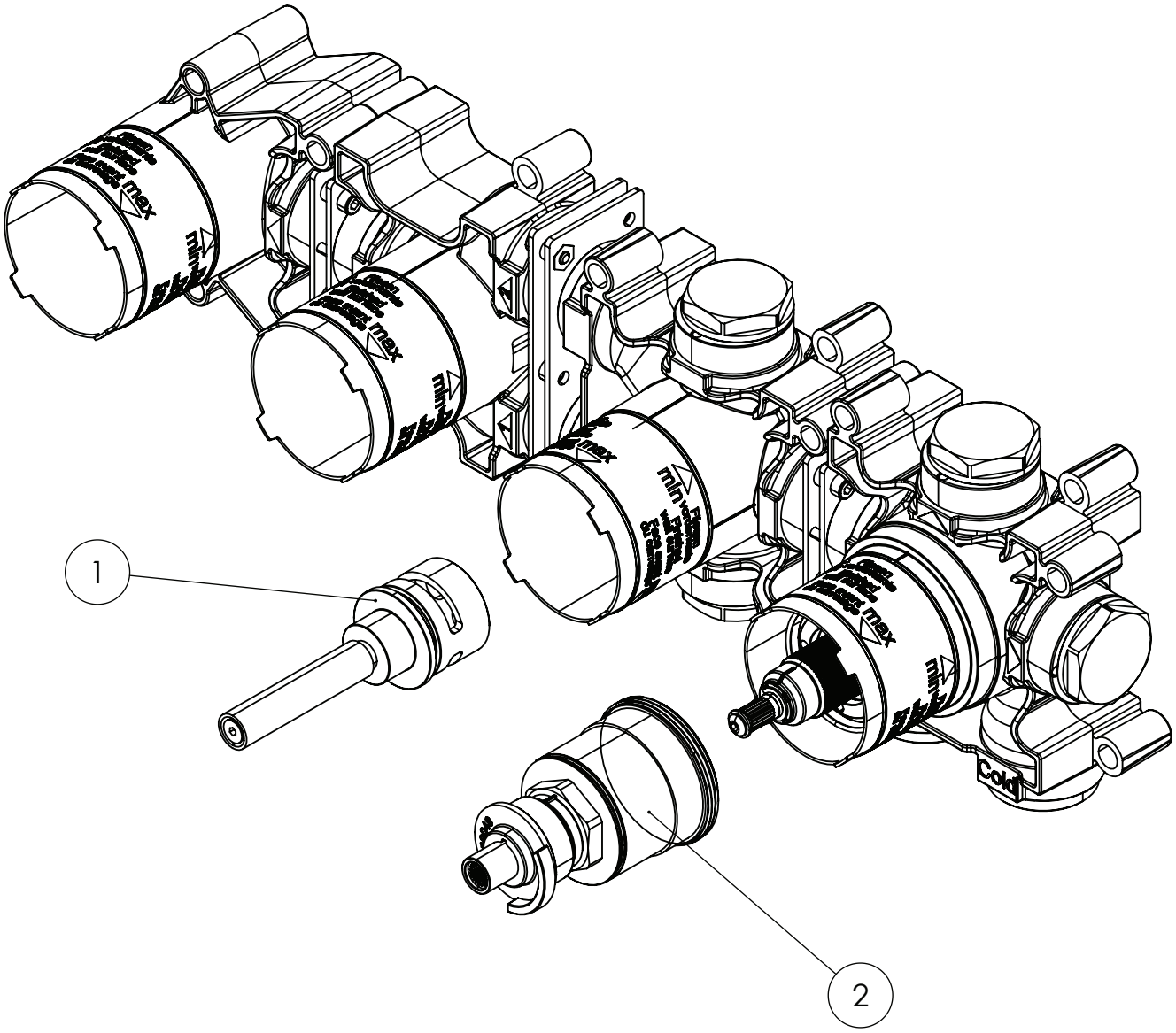

NUMBER	PART CODE	DESCRIPTION
1	E250005.000HESC	Module 2 Way Diverter Cartridge
2	E250031.000HESC	Module Thermo Cartridge

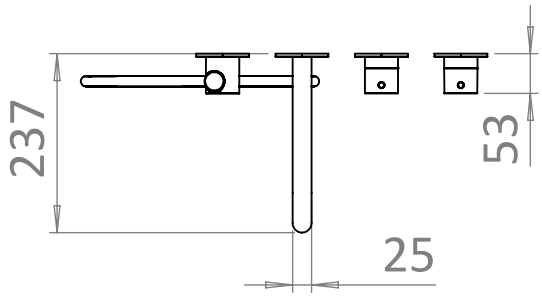
237
53
25

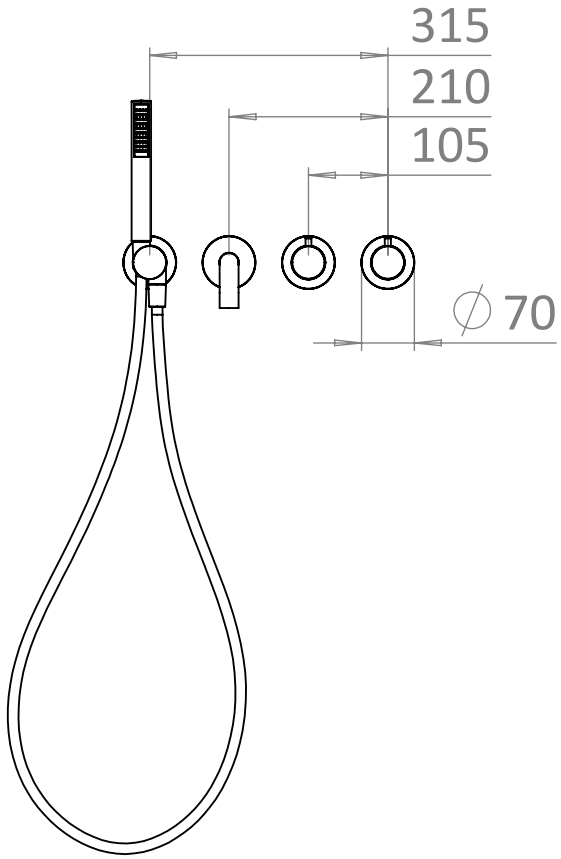
315
210
105
∅ 70

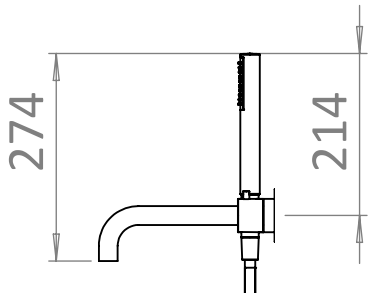
274
214