TECHNICAL DATA SHEET

PRODUCT: JT Naturals Rectangular Shower Tray

DESCRIPTION

Stone effect 27mm shower tray, made gelcoat, and stonecast resin. Compatible with 90mm waste

SPECIFICATION

Finish: Stone effect gelcoat

Product Type: Sanitary Ware

Construction: Stonecast Resin

Outlet Diameter: 90mm

Outlet Flange Diameter: 115mm

Product Height: 27mm

Fitting: Installation Instructions & waste grill Included

AVAILABLE OPTIONS

Colours: Haworth Black, Graphite Grey, Malham Grey, Runswick Cream, Flamborough White

Product can be cut by customer

Finish: Stone effect Anti-slip
Regulation: BS EN 16165:2021 - Anex C

WASTE

Product compatible with 90mm waste trap BS EN 274-1

Waste to be purchased separate

CE MARKING

Regulation: BS EN 14527
Rating: Class 1

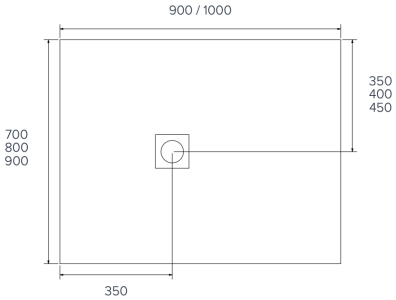

Rectangle

900x700mm
1000x700mm
1000x800mm
1000x900mm

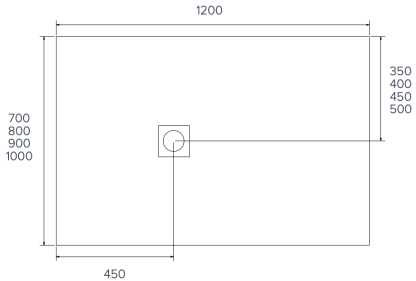

Rectangle

1200x700mm
1200x800mm
1200x900mm
1200x1000mm

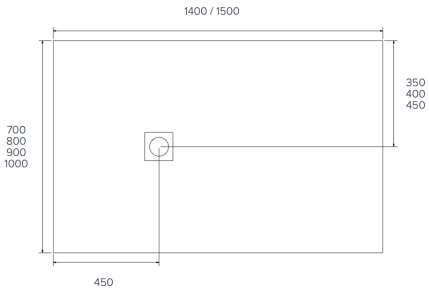

Rectangle

1400x700mm
1400x800mm
1400x900mm
1400x1000mm
1500x700mm
1500x800mm
1500x900mm

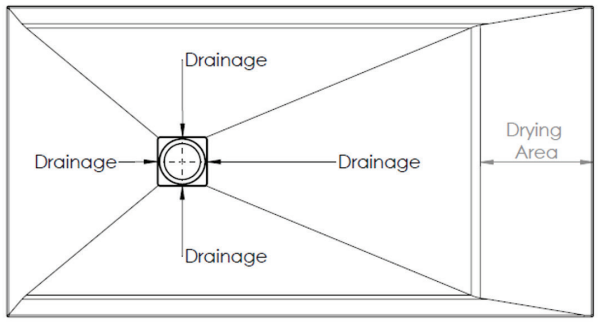

Drying area on product longer than 1400mm.

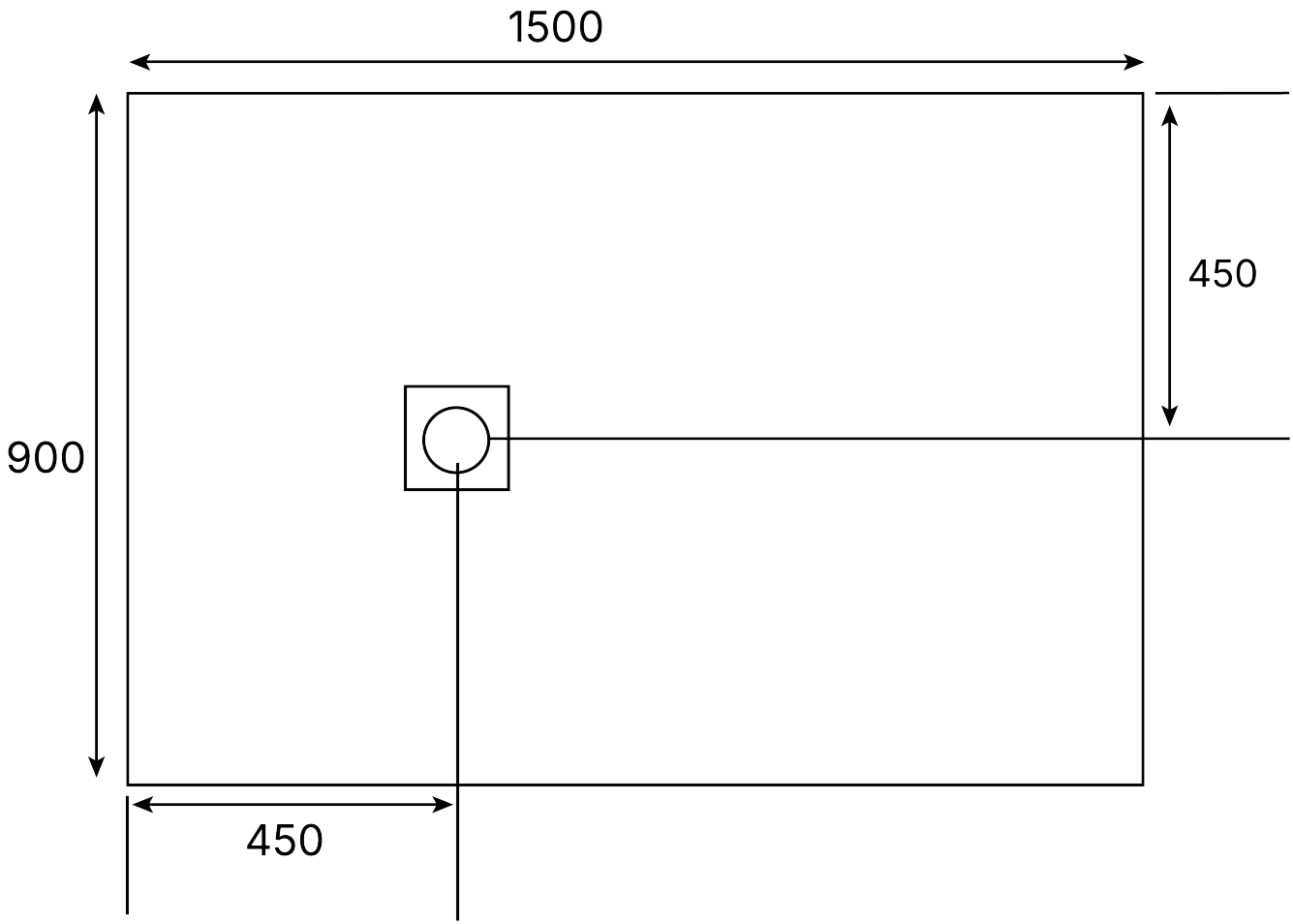
1500
450
900
450

CERTIFICATE of ASSESSMENT

Test conducted by:

National Testing Services Limited.
Malpas Station | Hampton Heath
Mapas
Cheshire | SY14 8LU
T: 01948 822099
F: 01948 822098
www.nationaltesting.co.uk

Client:

Just Trays Limited.
Units 1-4 Whitehall Ind. Est.
Ashfield Way | Farnley
Leeds | LS12 5JB
T: 0113 201 5090
F: 0113 201 5099
www.just-trays.co.uk

Corresponding report number:

02197-23/2191

Authorised by:

Philip Nolan
Technical Manager
National Testing Services Limited
20 February 2023

Sample specimen(s) referenced as:

Anti-Slip Shower Tray SP01-2000223

Test procedure(s) in accordance with:

BS EN 16165:2021—Annex C.
Determination of slip resistance of pedestrian surfaces - Methods of evaluation
UKSRG Guidelines-5:2016
The assessment of floor slip resistance.

ASSESSMENT

Scope

National Testing Services Limited were commissioned by **Just Trays Limited** to determine the **Pendulum Test Value (PTV)** of the following sample specimens, referenced as:

- **NTS24544, Anti-Slip Shower Tray SP01-2000223**

Pendulum slip tests were therefore undertaken using standard HSE techniques in accordance with BS EN 16165:2021-Annex C, and the UK Slip Resistance Guidelines (UKSRG) - Issue 5:2016, where appropriate. For each individual area, tests were originally carried out in dry and wet "as-found surface conditions using a calibrated Pendulum tester, use **rubber slider 55/57** which is used to simulate the softer sole of a trainer or "flip-flop" type shoe and is also used as a substitute foe skin when evaluating barefoot areas and a Surtronic micro-roughness tester.

Testing in wet surface conditions was completed using potable water applied by a hand-held sprayer. It was assumed that this type of contamination would be representative of the worst-case scenario encountered by pedestrian users of the area. No cleaning of the surfaces was carried out by the testing technician prior to testing in the "as-found" condition.

PTV Assessment Results

DETERMINATION OF PENDULUM TEST VALUE
IN ACCORDANCEWITH BS EN 16165:2021-ANNEX C AND THE UK SLIP RESISTANCE GROUP GUIDELINES, ISSUE 5:2016

Description of sample specimen(s) and type of slider used.	Surface		Temp (°)	Test Direction	PTV_{20}	Max. Floor Gradient (°)	Slope Corrected Values [Based on Max. Floor Gradient]		
	Condition	Contamination					Slip Potential [Each Direction]	Overall Classification [Based on Lowest Direction]	
								Slip Potential	Slip Risk [5]
NTS24544, Anti-Slip Shower Tray SP01-2000223	As found conditions, no cleaning carried out prior to test.	Dry Surface	18.8°	A[1]	94	N/A	Low	LOW PTV = 90	≥ 1 in 1,000,000 users.
				B[2]	93		Low		
				C[3]	90		Low		
				D[4]	N/A		N/A		
		Wet with potable water		A[1]	47	N/A	Low	LOW PTV = 47	≥ 1 in 1,000,000 users.
				B[2]	48		Low		
				C[3]	50		Low		
				D[4]	N/A		N/A		

PTV - Table Key

[1]Test Direction A = 0° parallel to the principle direction (along length)
[2]Test Direction B = 90° to same
[3]Test Direction C = 45° to same
[4]Test Direction D = only applicable to surfaces with a raised geometric surface, when tested using the Pendulum.
Not tested due to either space restrictions due to design, or direction not applicable or wet weather surface conditions.

[5]When considering the Pendulum Test Value (PTV) and slip potential results, care should be taken when interpreting results that are close to the boundaries of the categories. Current UKSRG Guidelines-5:2016 suggests that the slip potential presented by a floor with a PTV of 35 is not significantly different from one with a PTV of 37. However, the slip potential presented by a floor with a PTV of 23 is considerably higher than one with a PTV of 26, when considering the biomechanical data currently available.

[6]Current UKSRG guidelines-5:2016 suggests that the reading in the direction that gives the lowest PTV is likely to indicate the lowest slip resistance that a pedestrian would experience when walking at different angles and so should be considered when assessing the slip potential and design of any in-situ surface materials.

[7]In accordance with current UKSRG guidelines-5:2016 the risk ratios and results above are based on the basic condition of a reasonably active pedestrian aged between 18 -60 years, walking in a straight line at moderate pace, not rushing, turning, carrying, pushing or pulling a load. Moving away from this basic condition creates additional risks to users of the area and therefore increases slip potential. If such risks are identified then the likelihood of a slip accident occurring is even higher than stated.

Interpretation of Results

Pendulum results should be interpreted using the information reproduced in Table 1 (from UKSRG, 2011).

Table 1 Slip potential classification, based on pendulum test values (PTV)

Table 1 - Slip potential classification	PTV
High slip potential	0 - 24
Moderate slip potential	25 - 35
Low slip potential	**35 +**

**Assessing the slip resistance of flooring - GEIS2. Available at: https://www.hse.gov.uk/pubns/geis2.pdf (Accessed: April 18, 2023).*

Surface microroughness Assessment Results

Surface Roughness (Rz) Readings IN ACCORDANCE WITH THE UK SLIP RESISTANCE GROUP GUIDELINES, ISSUE 5:2016	MEAN
NTS24544, Anti-Slip Shower Tray SP01-200022	**24.7 µm**

Interpretation or surface microroughness

When surface microroughness data is used to supplement pendulum test data, the roughness results should be interpreted using the information reproduced in Table 2 (from UKSRG, 2011). Where only roughness data is available, use it in conjunction with the Slips Assessment Tool (SAT) detailed below.

Table 2 Slip potential classification, based on Rz microroughness values (applicable for water-wet pedestrian areas)

Table 2 - Rz surface roughness	Slip Potential
Below 10 µm	High
10 - 20 µm	Moderate
20 + µm	**Low**

**Assessing the slip resistance of flooring - GEIS2. Available at: https://www.hse.gov.uk/pubns/geis2.pdf (Accessed: April 18, 2023).*

naturals BY JT

SPECIFICATION FOR SHOWER TRAY WASTE 90 mm

PRODUCT CODE:

- SW100

FEATURES:

- Easy clean after assembly
- Fast flow rate (up to 36 lt / minute)
- Easy to assemble

MATERIAL

- Body and all white parts made of PP
- Sealing parts made of Elastomer (Black)

AVAILABLE VERSION / FINISHES:

- No Cap

COMPLIANCE:

- Meets EN-274

GUARANTEE

- 1 years

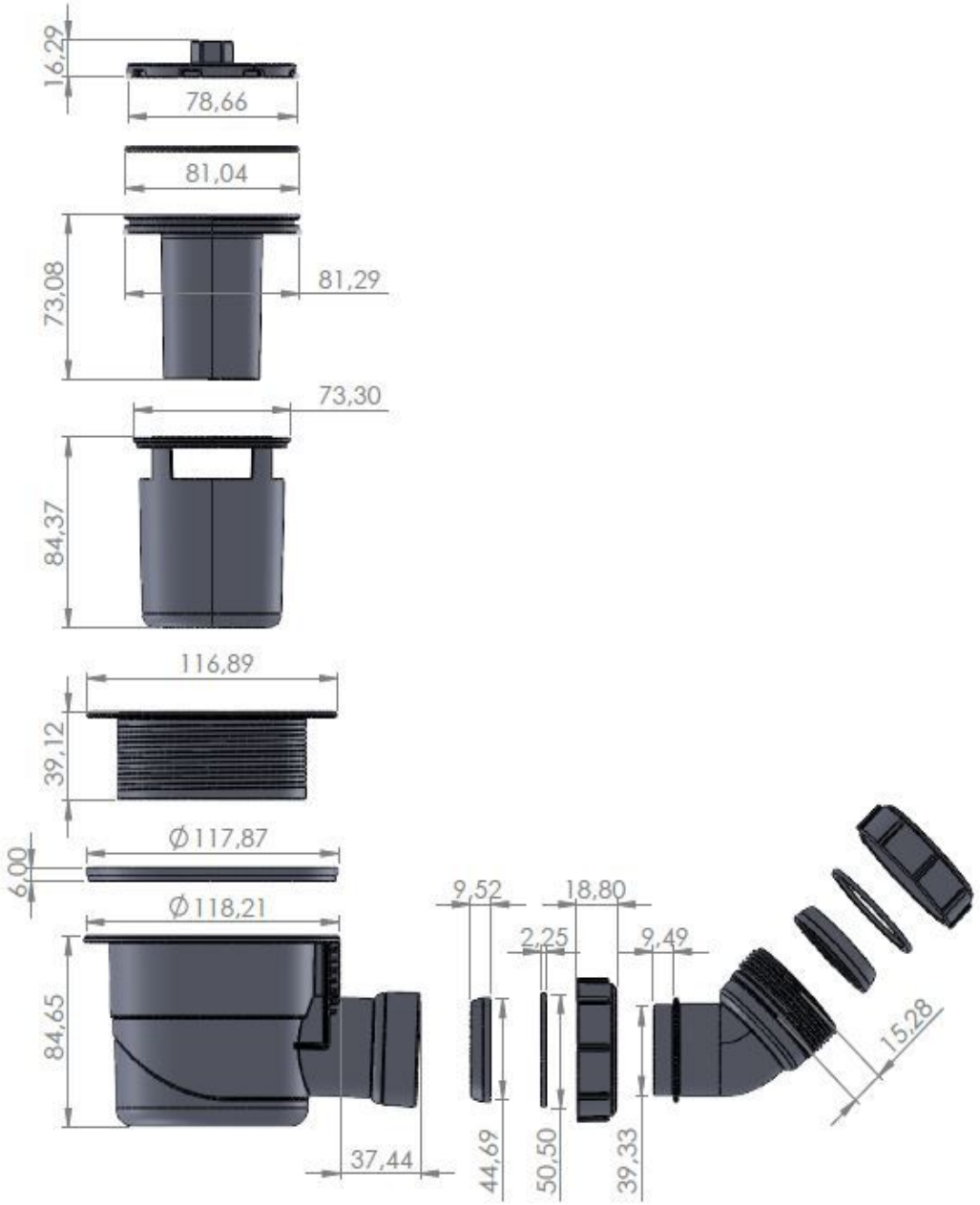
16,29
78,66
81,04
73,08
81,29
73,30
84,37
116,89
39,12
Ø117,87
6,00
Ø118,21
84,65
37,44
9,52
18,80
2,25
9,49
15,28
44,69
50,50
39,33