ONA

Unik (base unit with two drawers and basin)

DIMENSIONS

Length	600 mm
Width	460 mm
Height	645 mm

COLOURS AND FINISHES

510 Sand Grey

PRICE (VAT INCLUDED)

£1118.02

TECHNICAL DRAWINGS

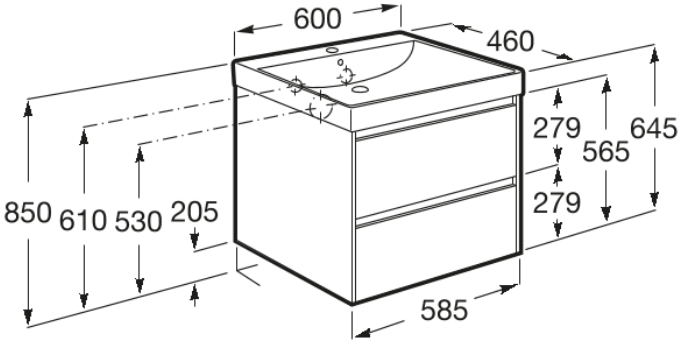

FEATURES

Base unit / Closing and opening system: Soft close drawers

Base unit / Doors and drawers combination: 2 drawers

Base unit / Internal dividers

Base unit / Structure: Drawers

Basin / Taphole configuration: 1 taphole in the middle

Basin Position: Central

Basin shape: Square

Dimensions / Basin and base unit / Height (mm): 645

Dimensions / Basin and base unit / Length (mm): 600

Dimensions / Basin and base unit / Width (mm): 460

Installation type: Wall-hung

Material / Base unit: MDF

Material / Basin: FINECERAMIC ®

Tap installation: On the basin

© Copyright 2026, Roca Sanitario, S.A. - All rights reserved | 16-10-2026 | https://www.uk.roca.com/products/unik-base-unit-two-drawers-basin-851688...?sku=A851688510

BOUGHT TOGETHER FREQUENTLY

Column unit

857635...

Column unit

857636...

Shelf unit with door

857637...

Basin mixer smooth body with click clack waste, Cold Start

5A3A9E..0

Basin mixer medium height smooth body with click clack waste, Cold Start

5A3C9E..0

Ona

Simple as nature. Ona pays homage to the diverse shapes of nature from our native Mediterranean. It is functional without ever appearing cold, with crisp aesthetics that follow the inherent warmth of the natural environment, made for those who enjoy the power of silent landscapes.

INSTALLATION AND USER MANUALS

© Copyright 2026, Roca Sanitario, S.A. - All rights reserved | 16-10-2026 | https://www.uk.roca.com/products/unik-base-unit-two-drawers-basin-851688...?sku=A851688510

User manual

© Copyright 2026, Roca Sanitario, S.A. - All rights reserved | 16-10-2026 | https://www.uk.roca.com/products/unik-base-unit-two-drawers-basin-851688...?sku=A851688510