CREO

Centre Drain Shower Tray

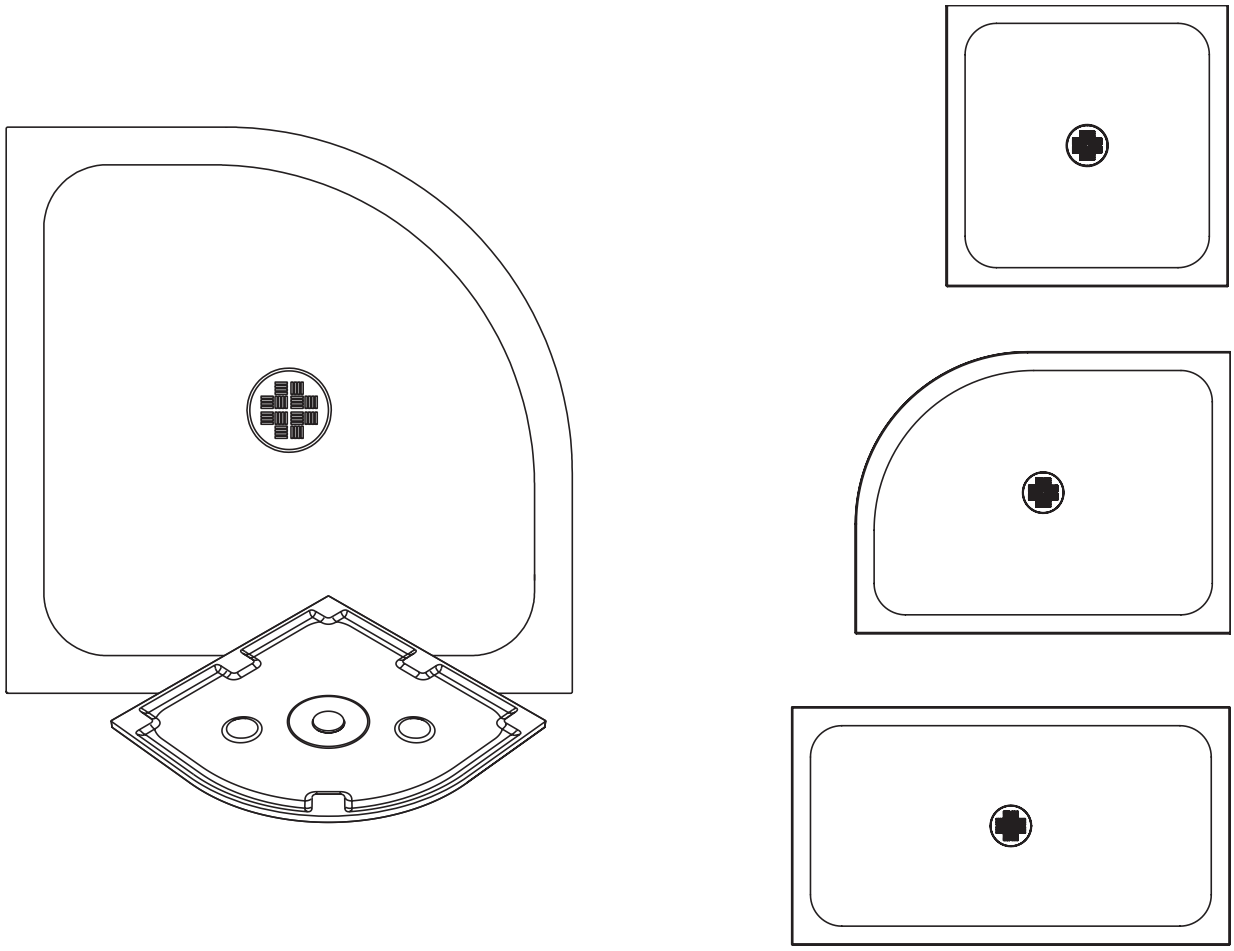

Install can be used for all sizes of Creo Shower Trays

IMPORTANT INFORMATION BEFORE YOU START

Please read carefully and keep this information for further reference.

Thank you for buying a Crosswater Product. To ensure that it works to its full potential, it needs to be fitted correctly. Check the contents of the pack carefully before installation.

Bathroom Brands will not be held responsible for any de-fit/re-fit costs where faulty product has been fitted. If any fault is found with materials or workmanship, it must be reported immediately to the manufacturer. Remedial action will be taken, based on information received, on condition that:

1. Full details are supplied to the manufacturer.

2. The product has not been modified or tampered with;

3. The manufacturer is informed of any damage/shortages prior to installation.

4. The product has not been installed, or attempts have been made to install.

We do not accept responsibility for any problems that may occur through incorrect installation. This product should only be installed by a suitably qualified plumber/installer.

Should the installation be completed by a non-qualified person any product guarantee maybe considered invalid. For a claim made under our warranty, written certification of your installer's qualifications may be required.

BEFORE YOU START

Important Pre-Installation Notes

Check tray before beginning installation process. Check the tray tolerance before beginning the installation process, as below. Tolerance is measured on the top of the tray ONLY. Any variances on the base of the tray will be taken up by following the correct installation process.

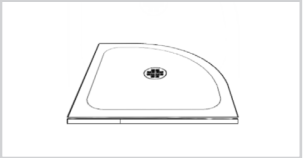

1. Place the tray on a flat level surface, larger than the tray.

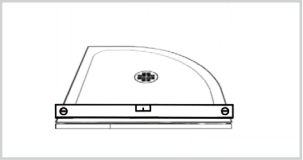

2. Use a long spirit level placed on the edge of the tray.

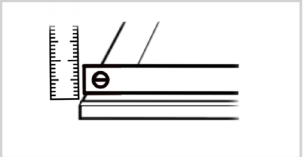

3. Measure the gap between the spirit level and top of the tray. Do not push the spirit level down at the opposite end, this will give an incorrect measurement.

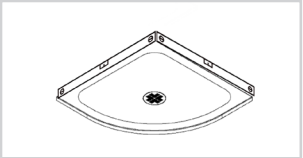

4. Repeat on all edges.

BEFORE INSTALLATION:

Ensure the intended shower enclosure dimensions are compatible with the shower tray, taking into account the reduction in tray dimension that will result after tiles/wall panelling have been fitted.

Ensure the space available is correct for the shower tray purchased.

Tile or install wall coverings before fitting the tray. We recommend fitting wall covering down onto the tray.

Avoid positioning any high pressure water feeds directly over the waste, this may compromise waste capacity. Check the flow rate of intended power/deluge shower fittings does not exceed the flow rate capacity of the shower waste capacity.

It is the installers responsibility to ensure the shower suite has been arranged to retain water as per the needs of the customer.

The shower tray purchased is designed to be fitted directly to a wooden (Marine plywood and not floor boards) or concrete floor. Therefore, the plumbing services MUST BE fitted below the floor surface. If this is not possible a tray riser kit may be purchased as an additional item which comes complete with a leg set.

THIS TRAY MUST BE INSTALLED USING CROSSWATER SHOWER WASTE VTHFWS90.

The manufacturing tolerance for each CREO tray size can be found at www.crosswater.co.uk. Please check the measurements taken from the purchased tray ONLY with the published tolerances.

BEFORE YOU START

Tools Required (not supplied):

Long Spirit Level		Pencil	
Tape Measure		Silicone Silicone, only use neutral mould resistant brands.	
Water Resistant PU Adhesive		Spanner Only required to install feet option	

Note: Other tools may be required depending on install need.

Components Supplied:

Creo Round Shower Waste Cover CREOWASTEW	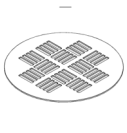

Required Parts:

90mm Shower Waste CRHFWS90 Conforms to BS EN 274 50mm water seal Flow Rate 32 L/m	

INSTALLATION - ON THE FLOOR USING MARINE PLYWOOD

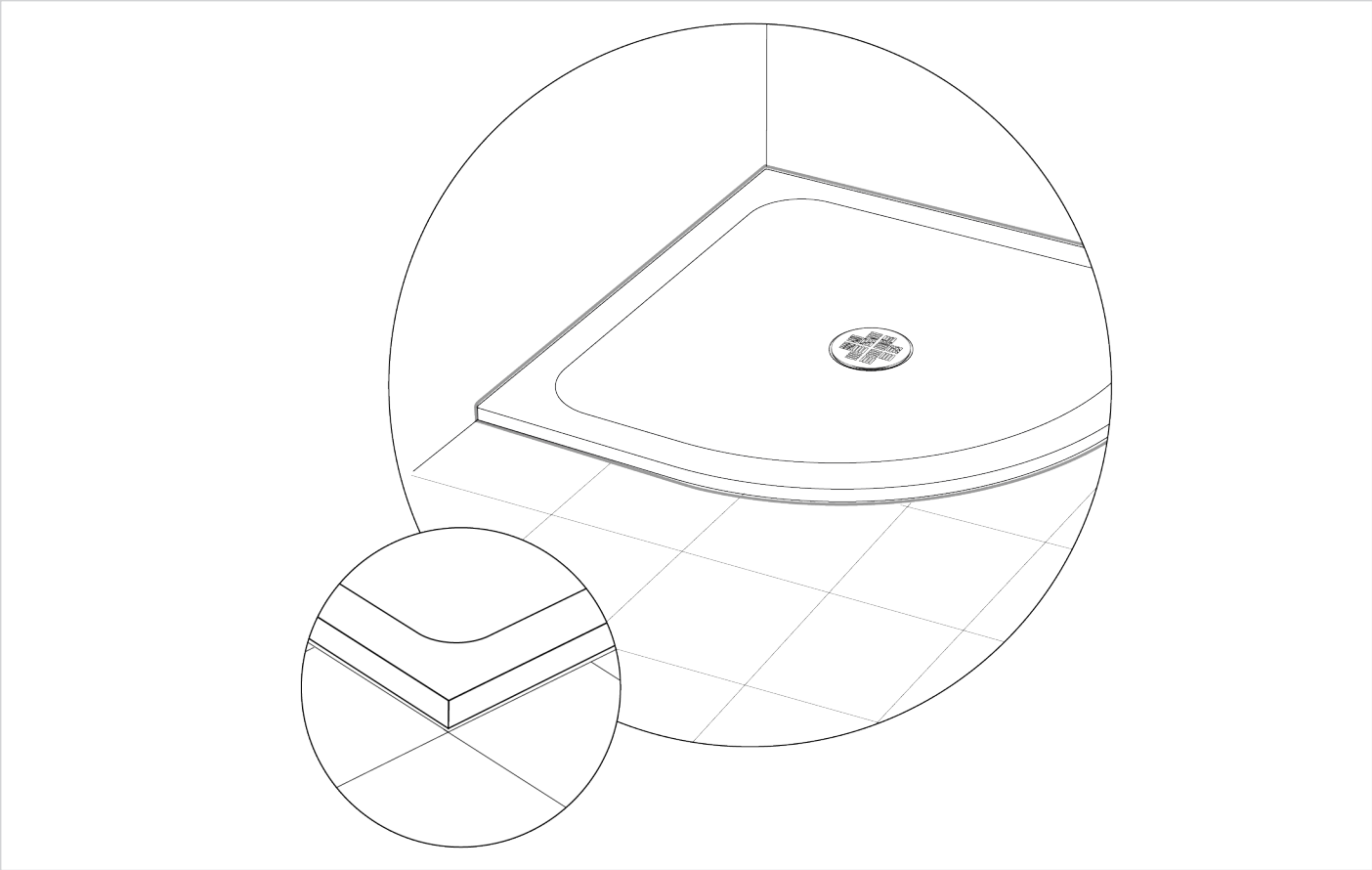

1

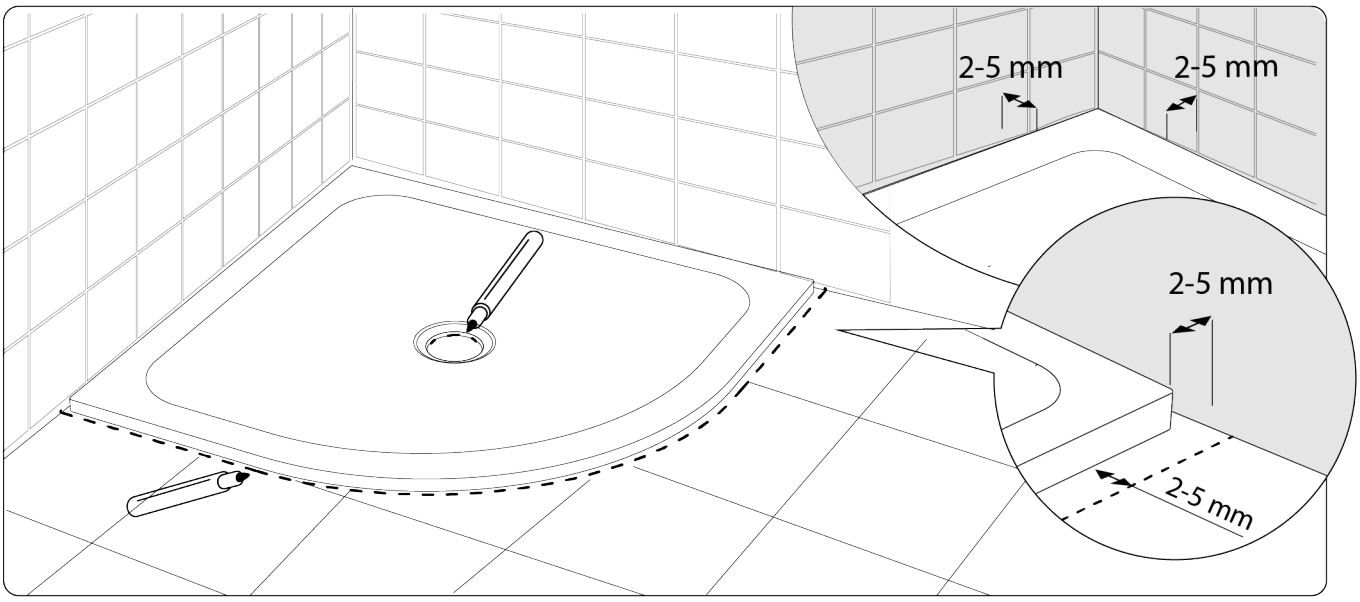

INSTALLATION - ON THE FLOOR USING MARINE PLYWOOD

2

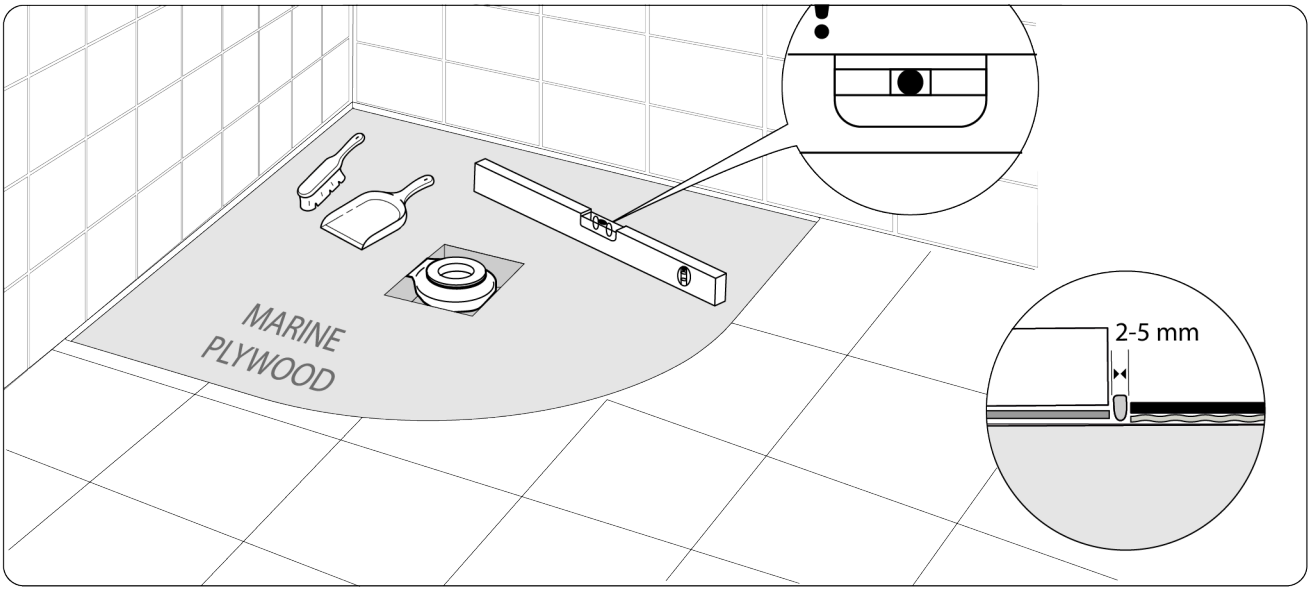

3

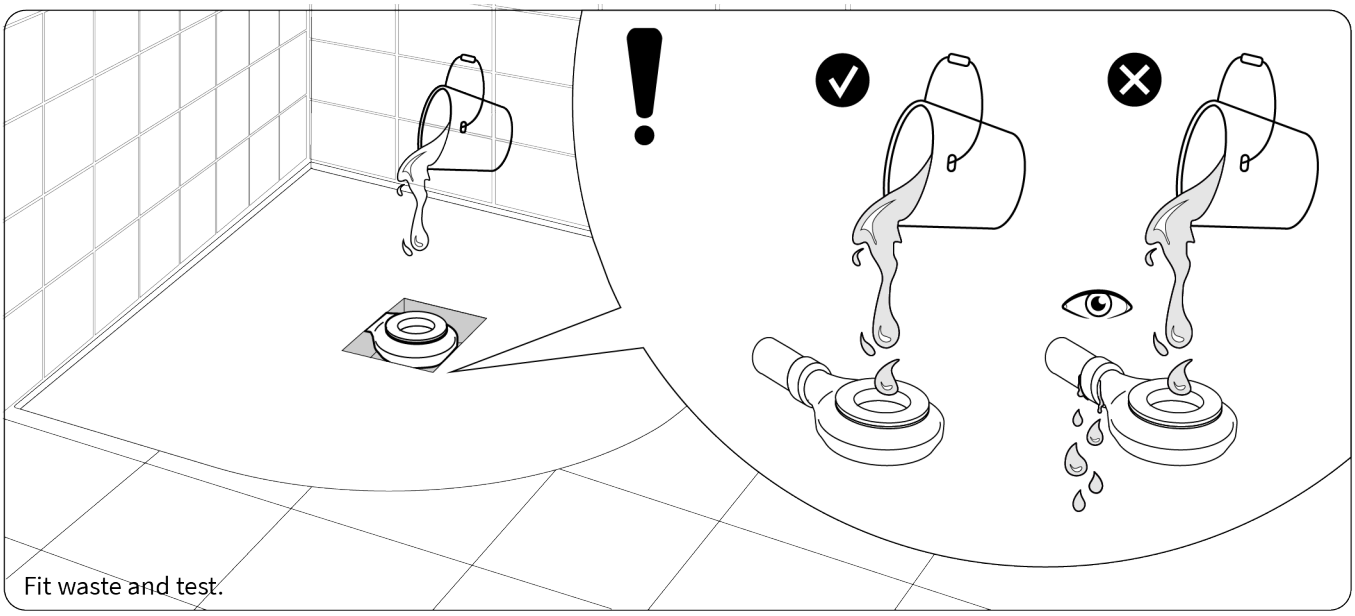

INSTALLATION - ON THE FLOOR USING MARINE PLYWOOD

4a **USE EITHER METHOD 4a OR 4b (MORTAR BOARD BASE)**

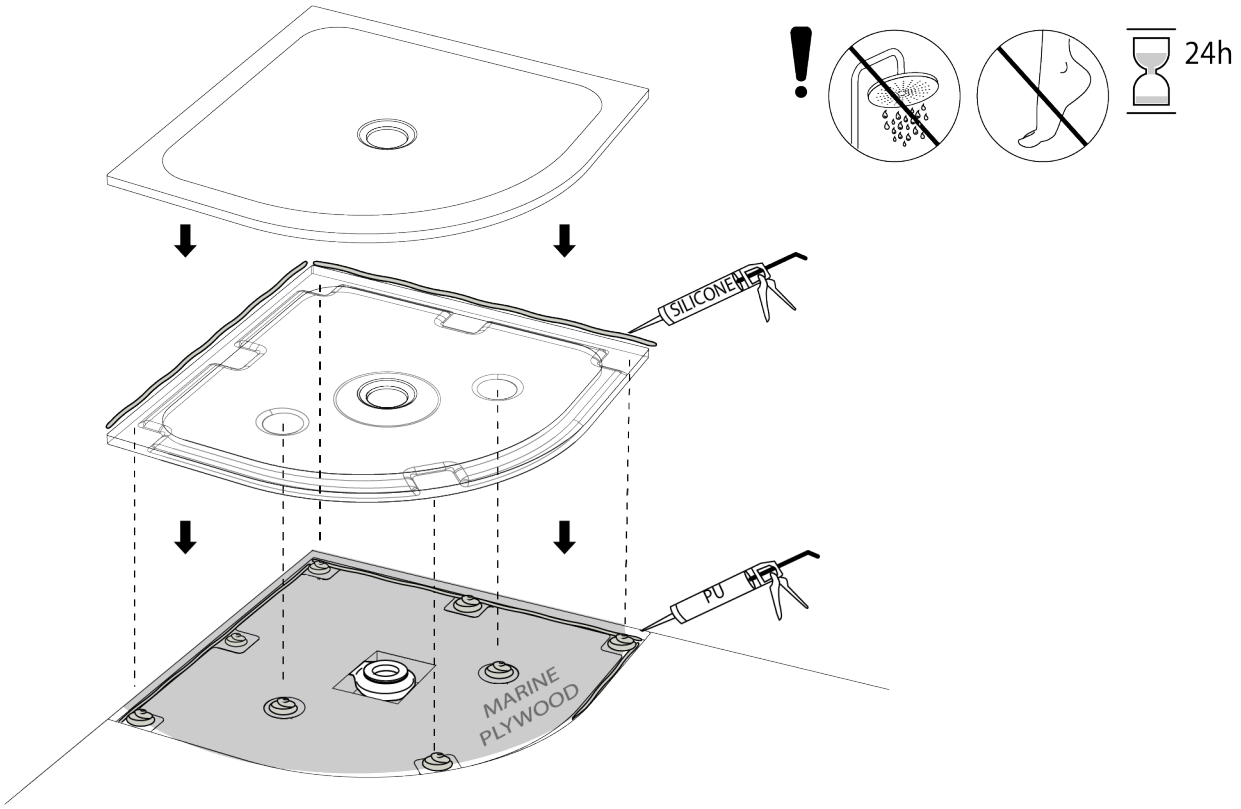

4b **USE EITHER METHOD 4a OR 4b (MORTAR BOARD BASE)**

Mix sand and cement at 5:1 ratio and combine an anti-crumbling additive. Spread evenly over the entire area under the tray with approximately 10-15mm thick mixed mortar screed.

Any unsupported sections under the tray could lead to cracking.

Allow to dry for at least 24 Hours.

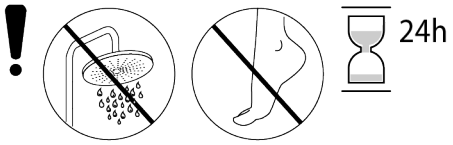

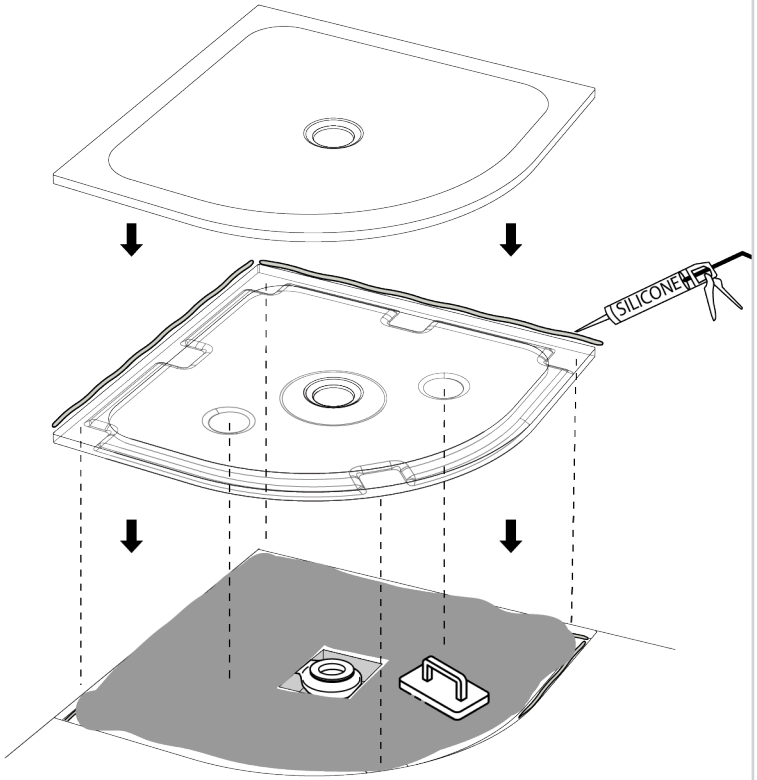

INSTALLATION - ON THE FLOOR USING MARINE PLYWOOD

5

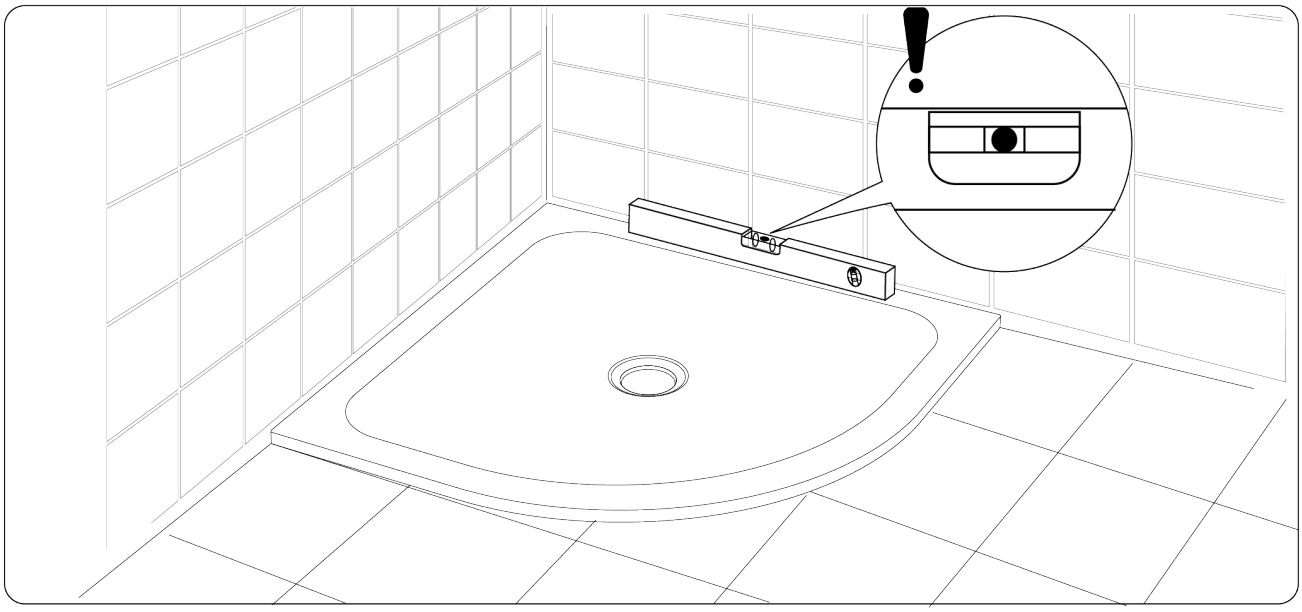

6

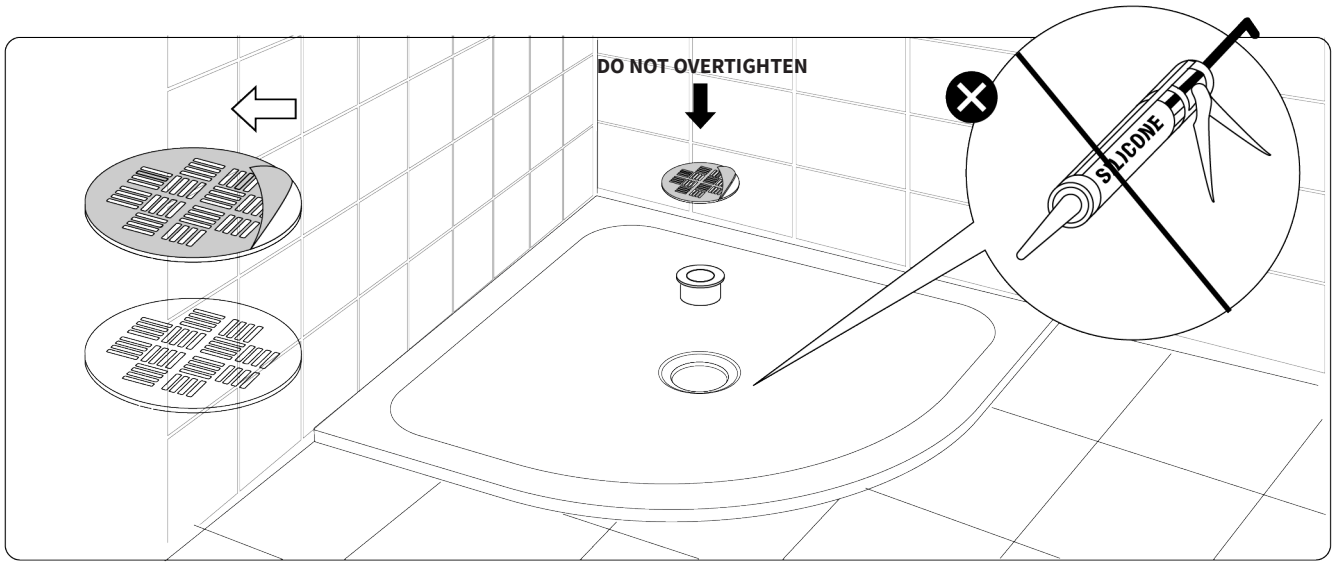

INSTALLATION - ON THE FLOOR USING MARINE PLYWOOD

7

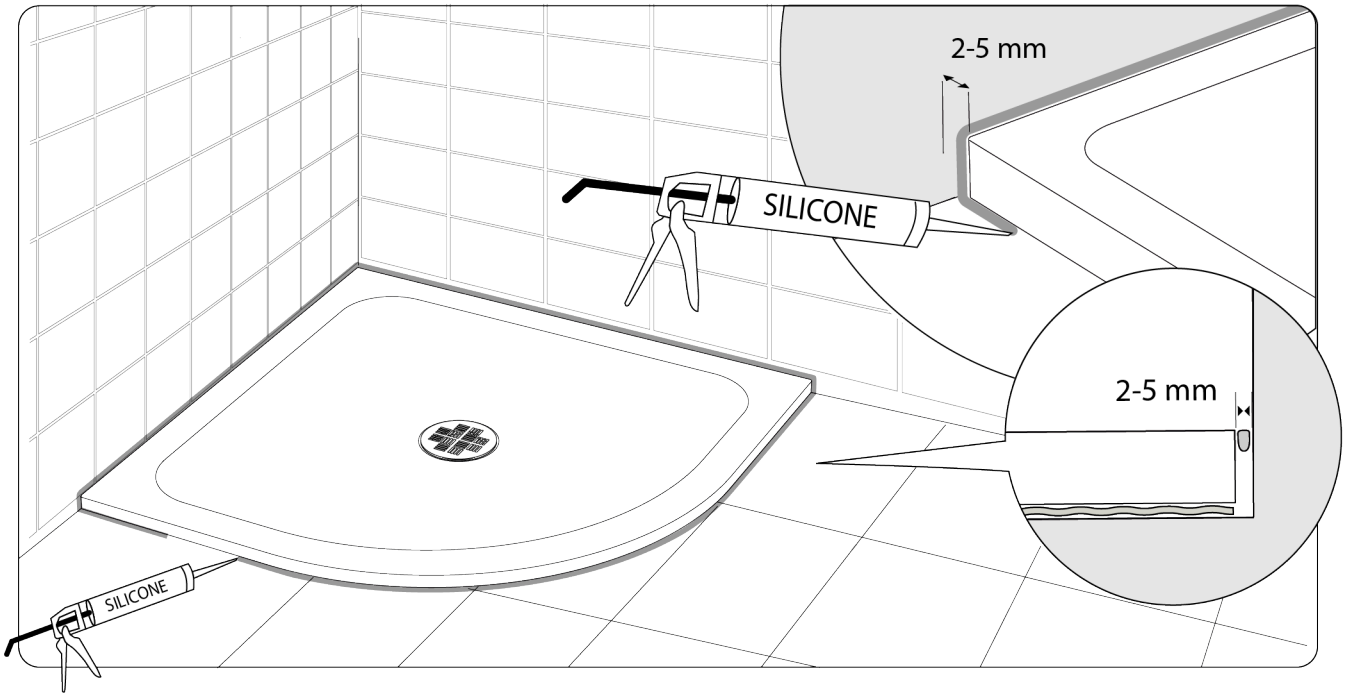

8

INSTALLATION - LEVEL WITH THE FLOOR

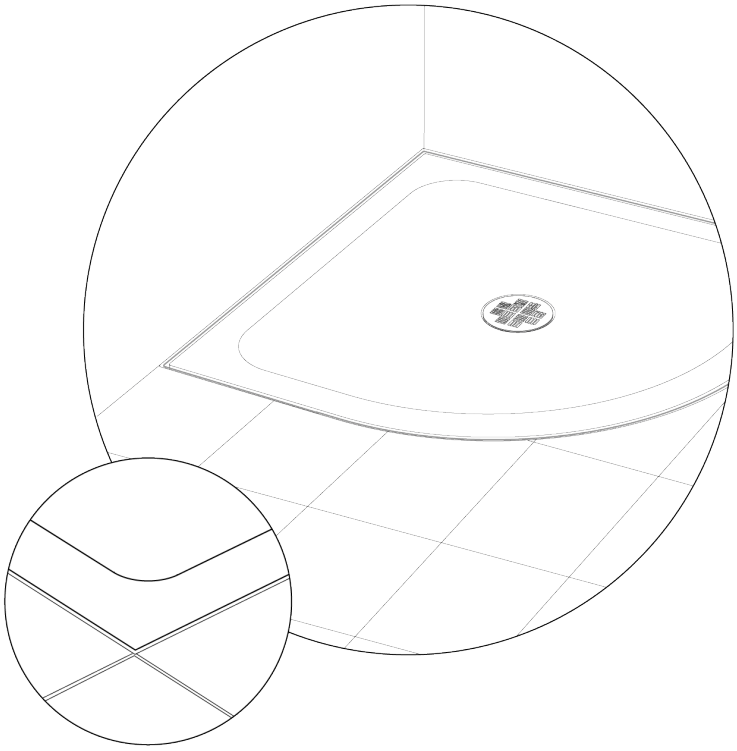

Tile or install all wall coverings before fitting the tray. We recommend fitting wall covering down onto the tray. Install this in accordance with DIN 18534.

1

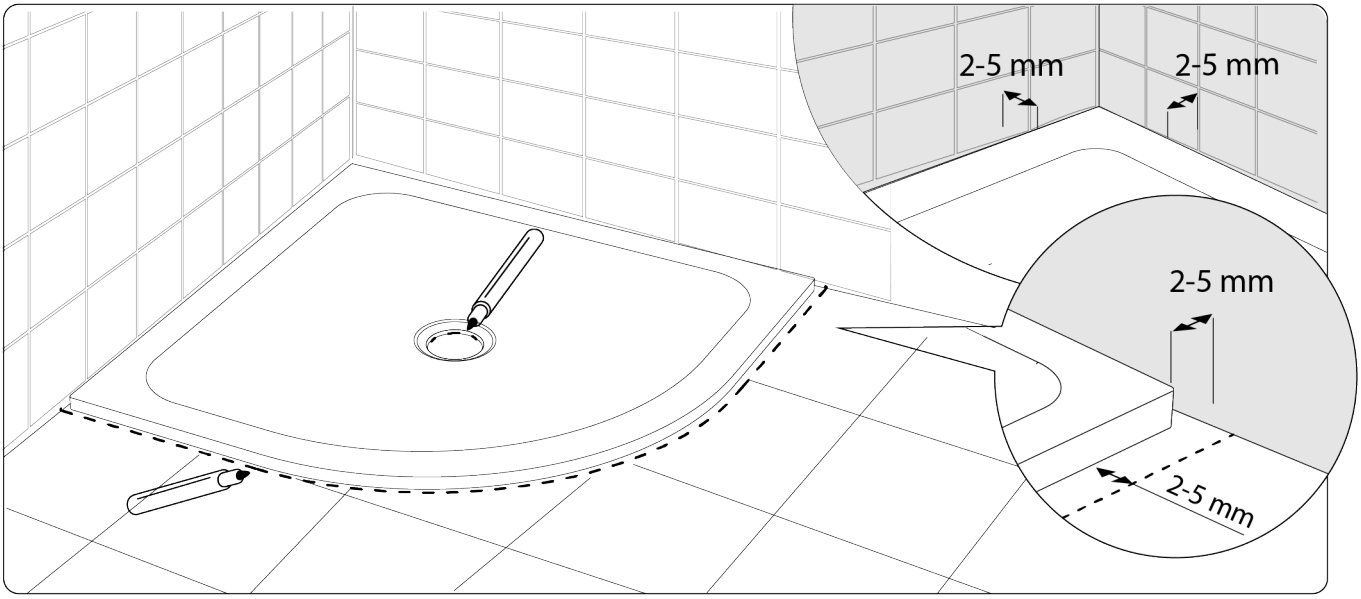

INSTALLATION - LEVEL WITH THE FLOOR

2

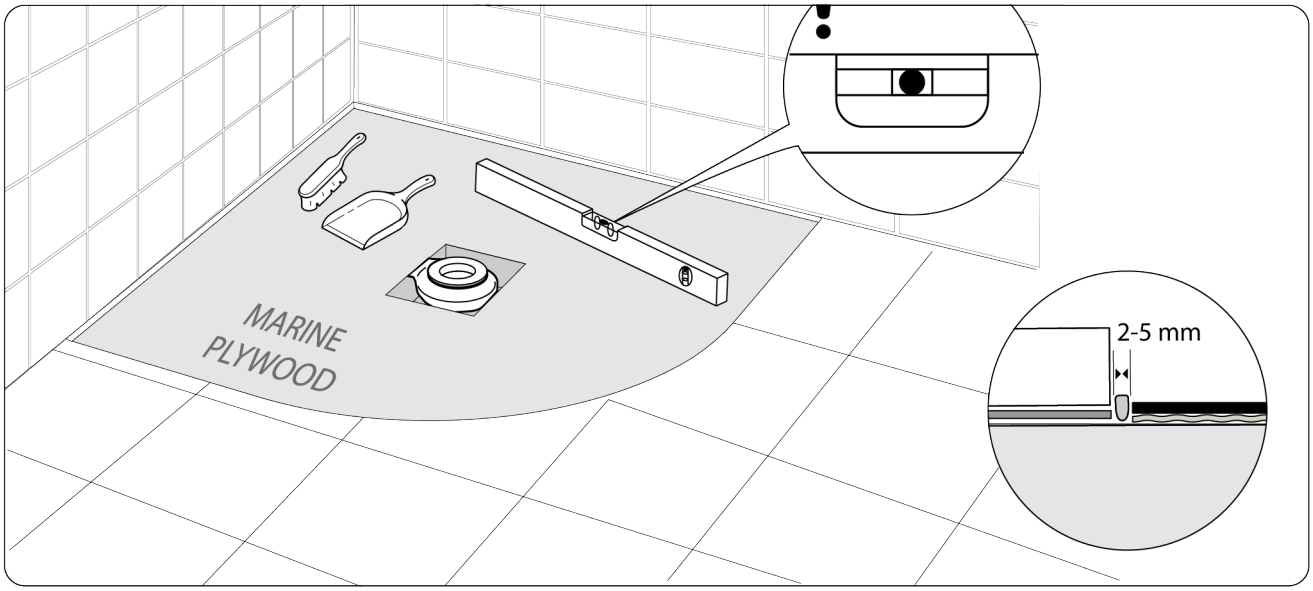

3

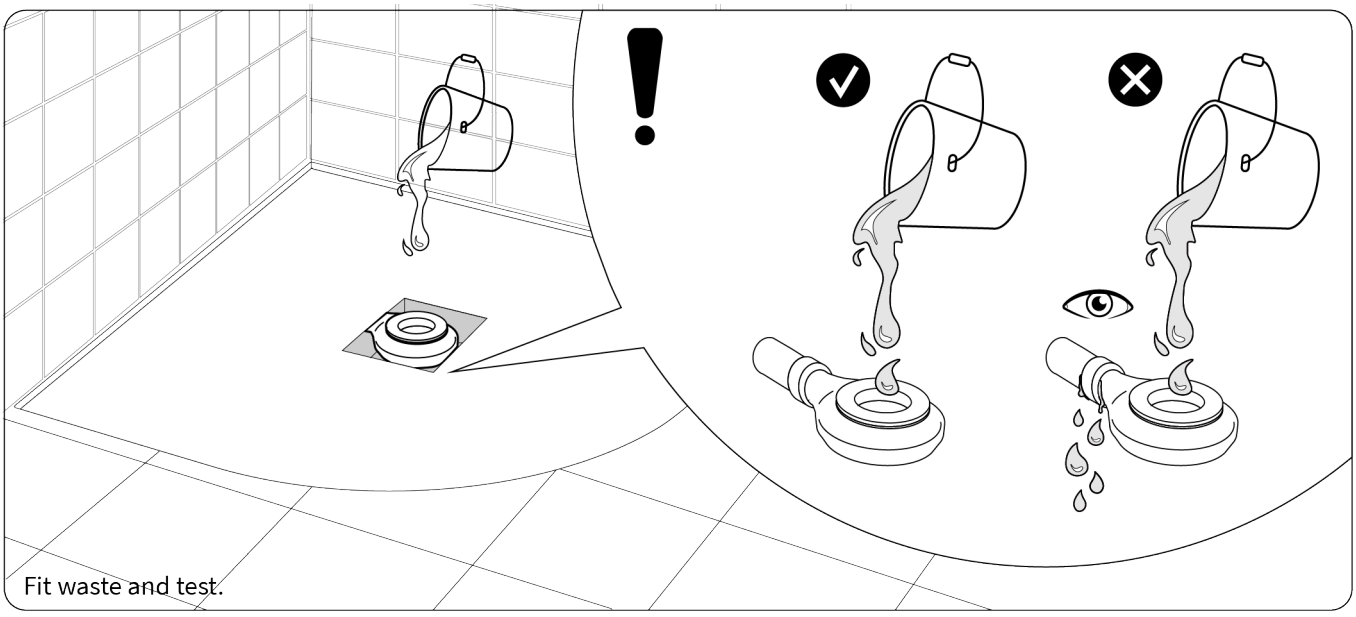

INSTALLATION - LEVEL WITH THE FLOOR

4a USE EITHER METHOD 4a OR 4b (MORTAR BOARD BASE)

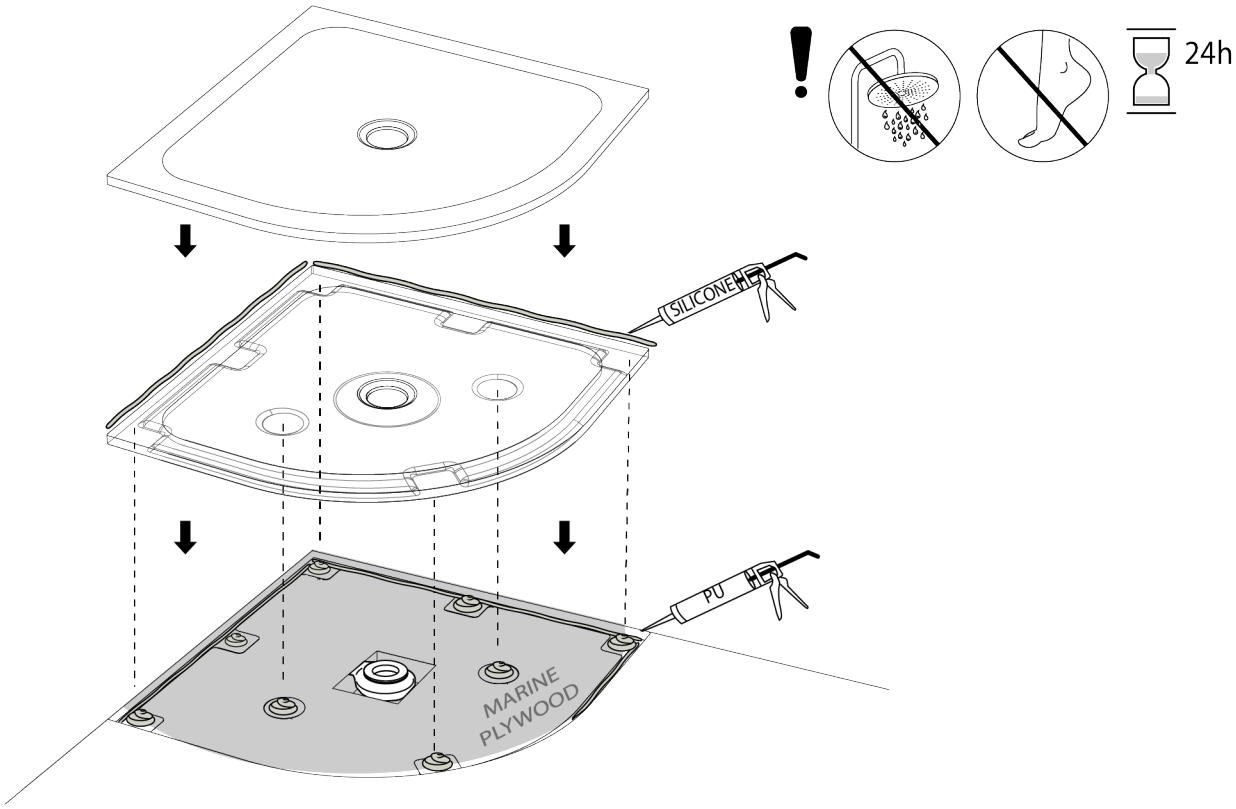

4b USE EITHER METHOD 4a OR 4b (MORTAR BOARD BASE)

Mix sand and cement at 5:1 ratio and combine an anti-crumbling additive. Spread evenly over the entire area under the tray with approximately 10-15mm thick mixed mortar screed.

Any unsupported sections under the tray could lead to cracking.

Allow to dry for at least 24 Hours.

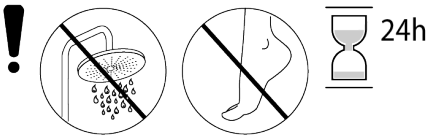

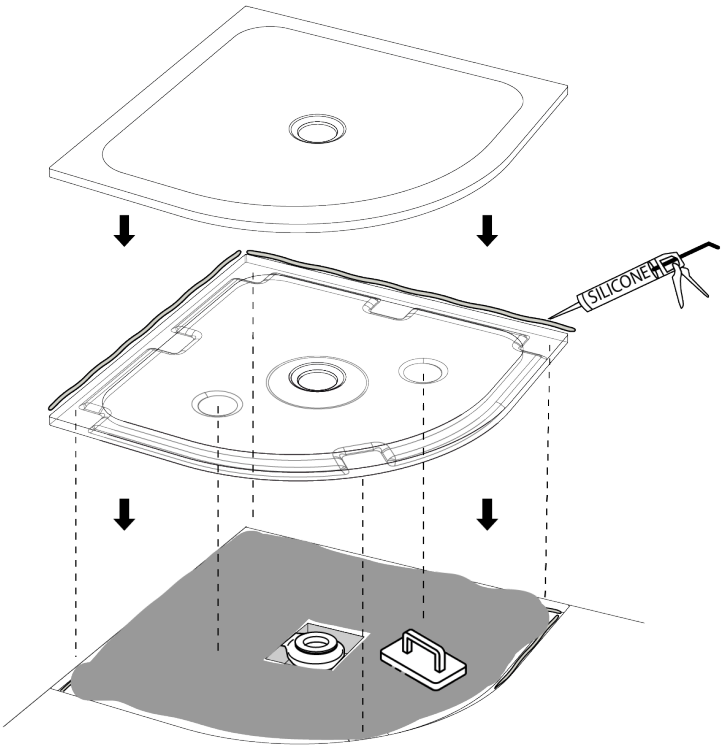

INSTALLATION - LEVEL WITH THE FLOOR

5

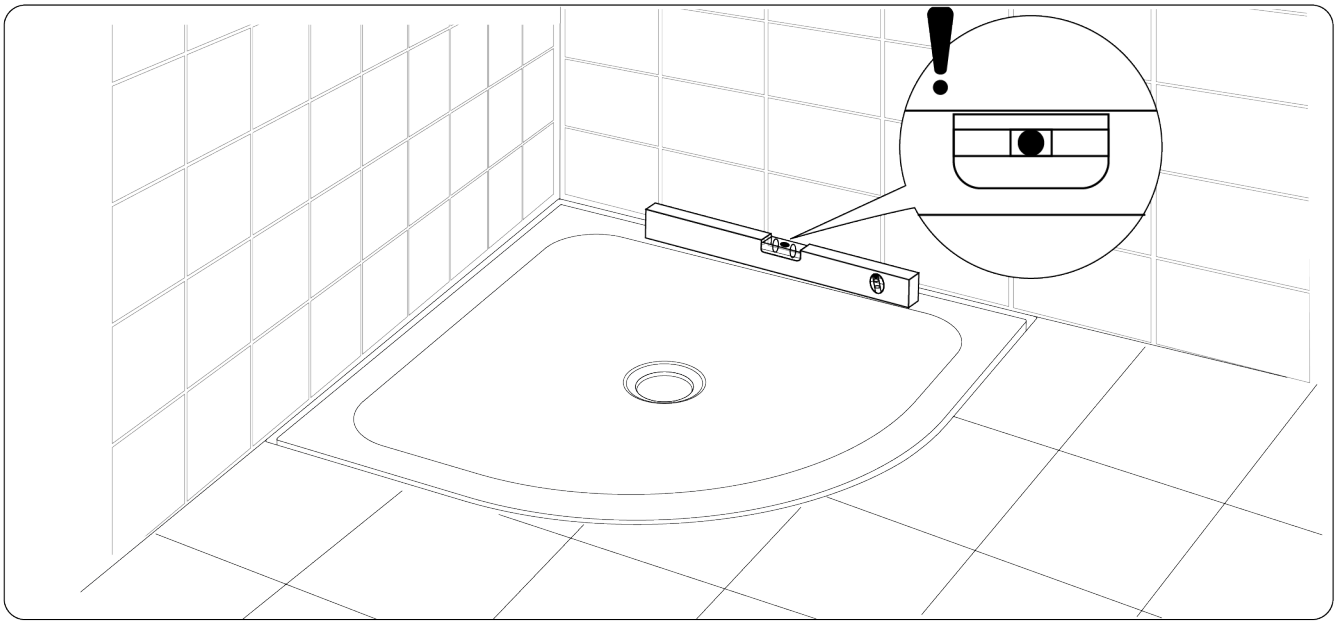

6

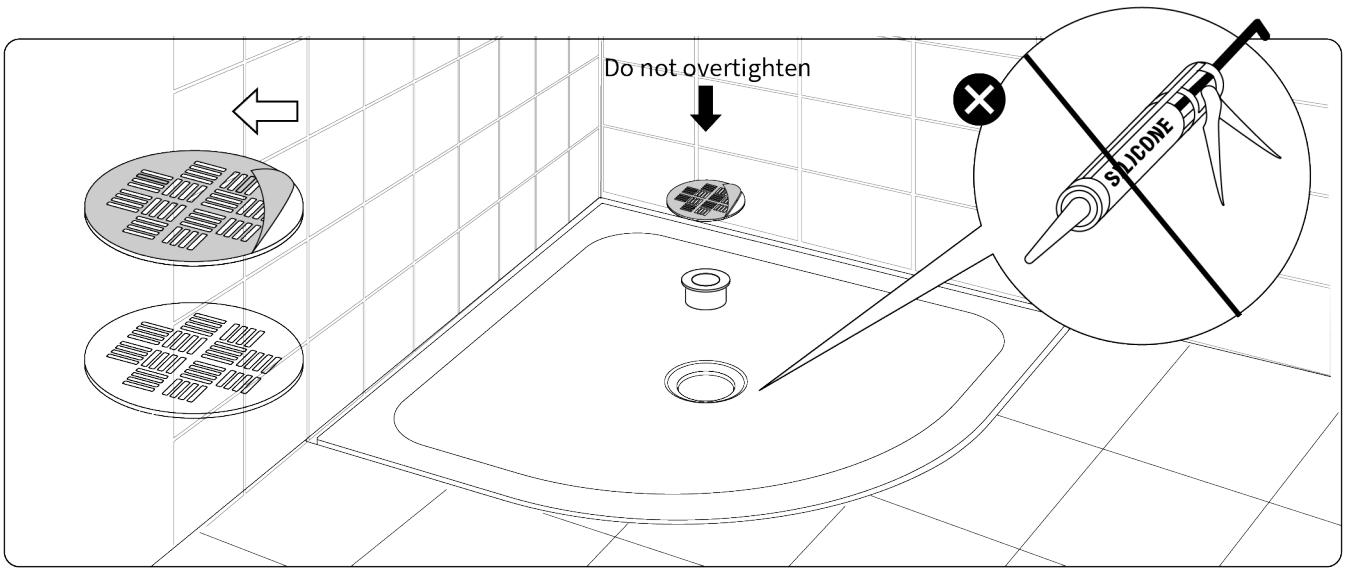

INSTALLATION - LEVEL WITH THE FLOOR

7

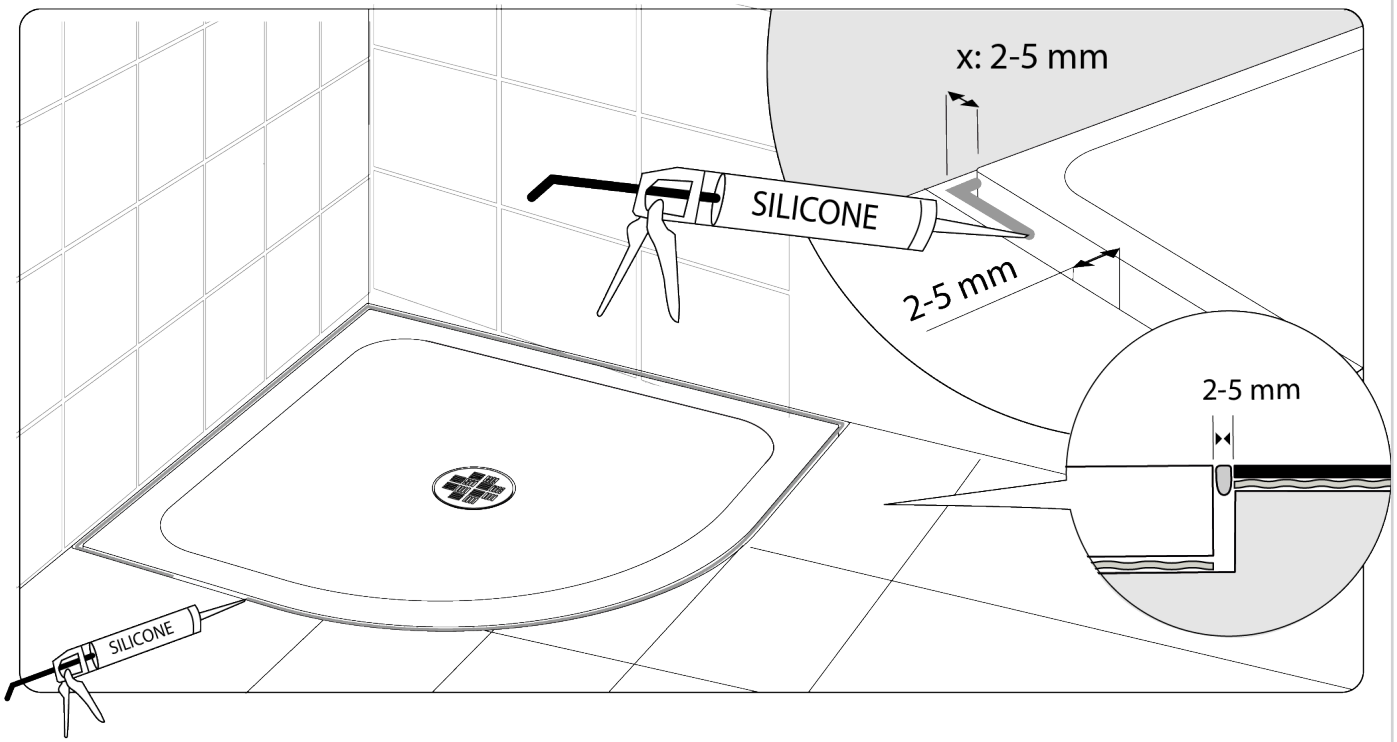

8

INSTALLATION - RISER KIT

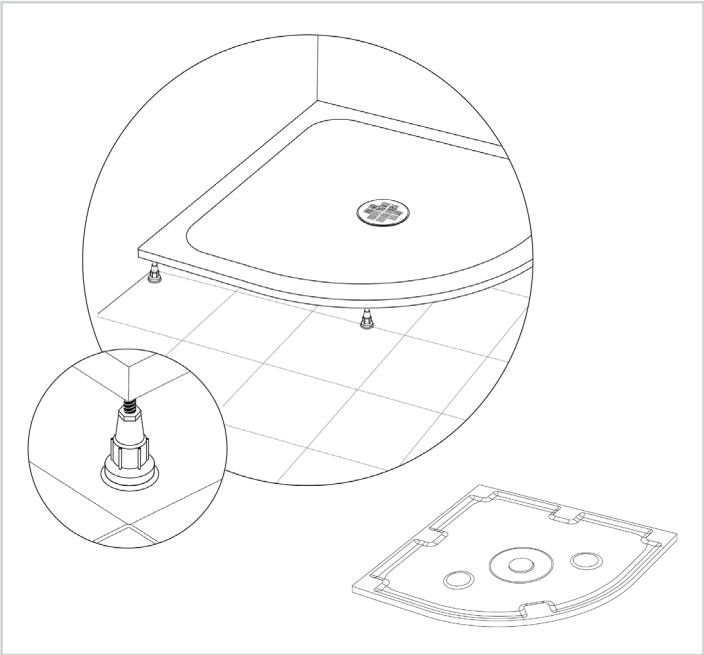

Required Parts:

x8 Tray Legs TRAY25MMLEGSET8	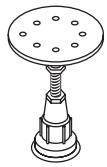

Tools Supplied:

3M Paper	
3M Adhesive Pads	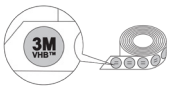

IMPORTANT: ALWAYS USE 8 RISER LEGS

1. Before bonding the feet to the shower tray, identify the foot bonding locations underneath the shower tray according to this instruction.

2. Before installing the shower tray, use the degreasing wipes included to wipe clean the areas on the shower tray where the feet will be bonded, and each foot top that will pair with the shower tray. Apply the 3M VHB double-sided adhesive tape to the foot tops only when the surfaces are degreased and cleaned with the degreasing wipes.

3. Bond the feet in the centres of the bosses located underneath the shower tray. In some shower tray models, the boss surfaces may be smaller than the foot top face. This does not affect the quality of bonding.

4. Keep the work place clean and dry during bonding. If the surfaces cleaned with the degreasing wipes become dirty or polluted with dust before bonding, repeat the cleaning with the wipes. The paired surfaces will only bond securely and durably if properly cleaned and degreased with the wipes.

5. Once the feet have been bonded underneath the shower tray, stand the shower tray on its feet and leave it for 30 minutes for the adhesive tape to develop a grip before proceeding with the installation process.

6. Once the feet have been bonded underneath the shower tray, do not tilt the shower tray so that it rests or becomes loaded on or to its sides; the load must act on the bonded feet along their height only.

7. Do not slide the shower tray with its feet bonded underneath along a longer distance. Li and carry the shower tray when relocating it. You may only slide the shower tray on its feet for a short distance when moving it against the wall.

8. This instruction is provided for the installation of the shower tray on its dedicated feet and on a hard floor (lined with tiles, concrete screed, etc.). There are many factors affecting the proper performance of this product, including different installation materials, substrates, the work environment, etc. Due to this, no perfect application efficiency can be guaranteed for all possible installation and operating conditions. The factors are known to the installer only, and within their reasonable control. The installer shall be solely liable for the proper installation of this product. Any damage or loss which may result during the installation or operation of this product due to non-compliance with the guidelines specified herein are not covered by the product warranty.

INSTALLATION - RISER KIT

1

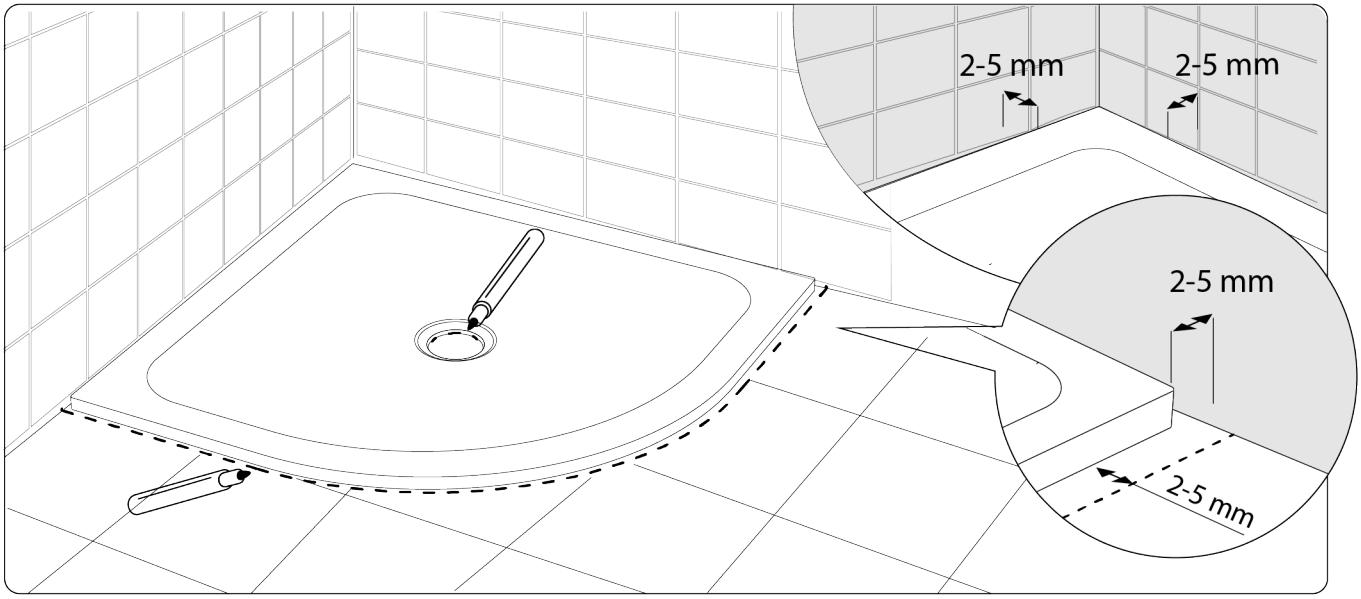

2 **USE EITHER:**

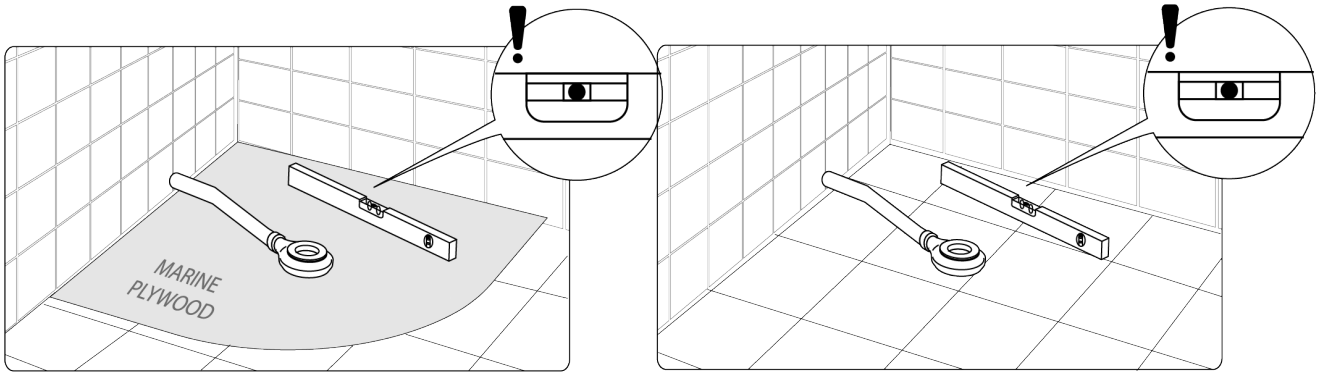

Marine Plywood

Floor Tiles

INSTALLATION - RISER KIT

3

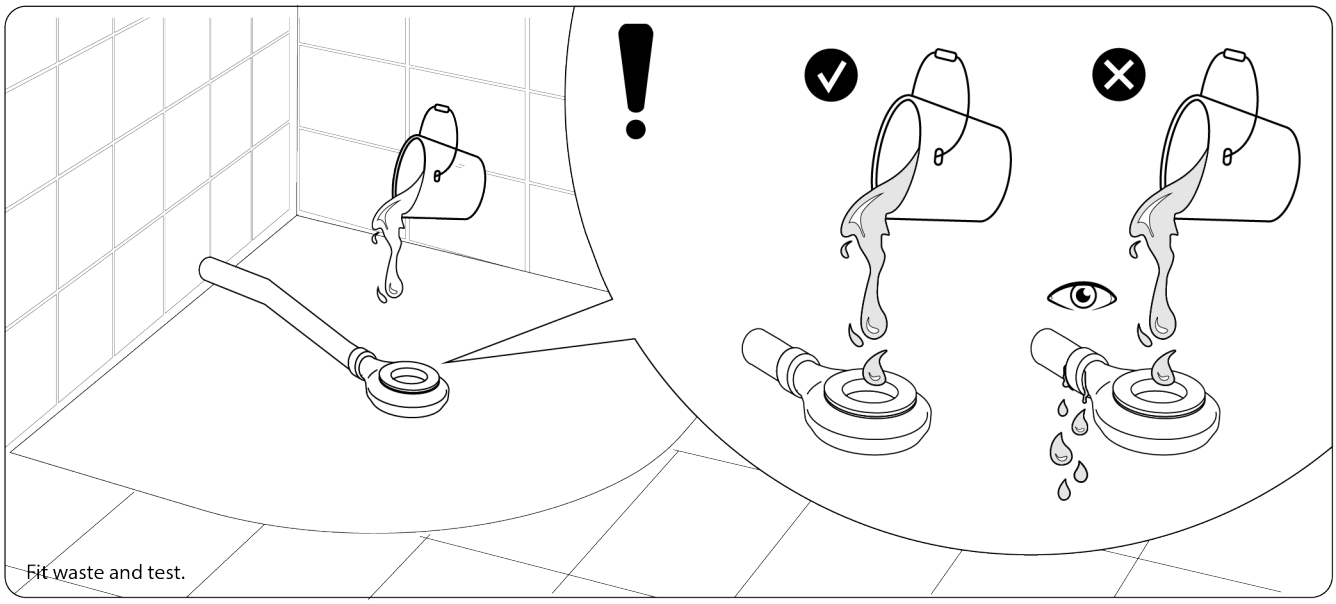

4

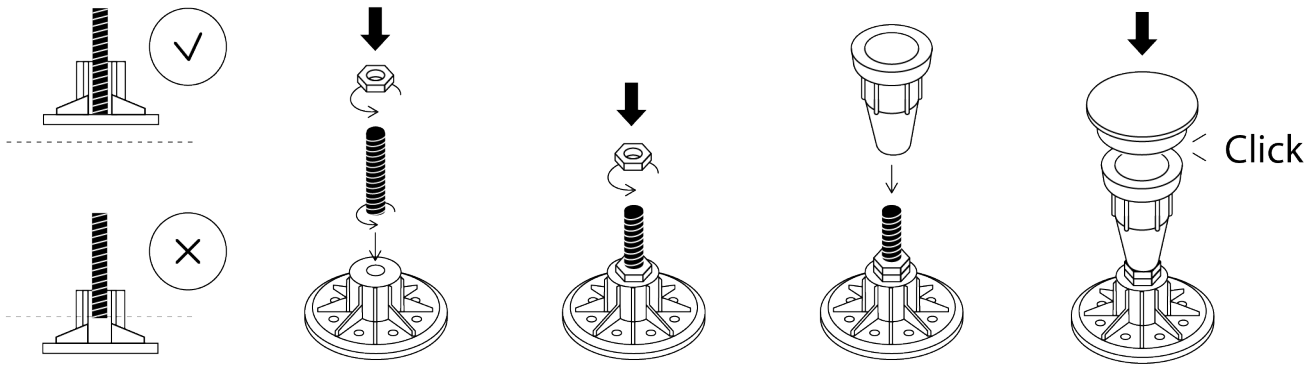

INSTALLATION - RISER KIT

5

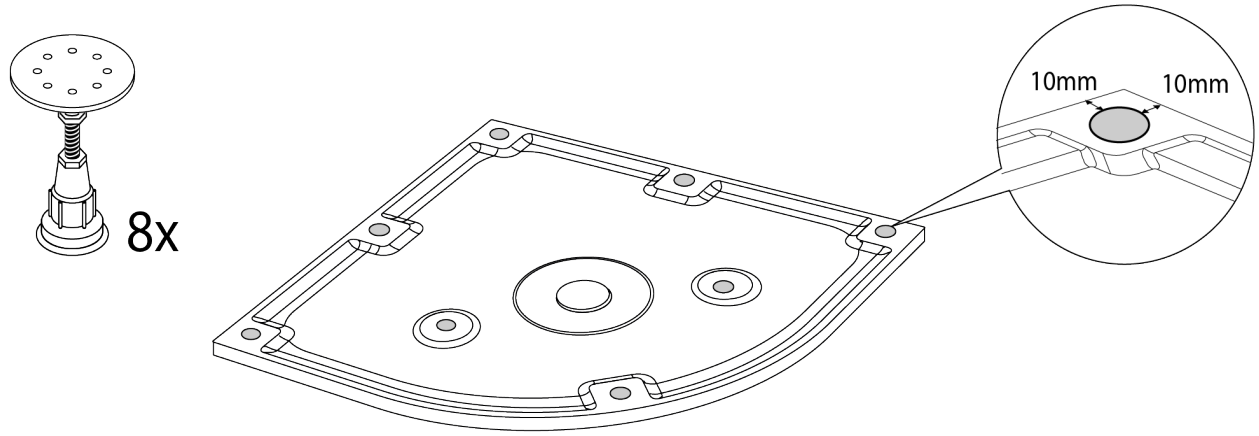

6

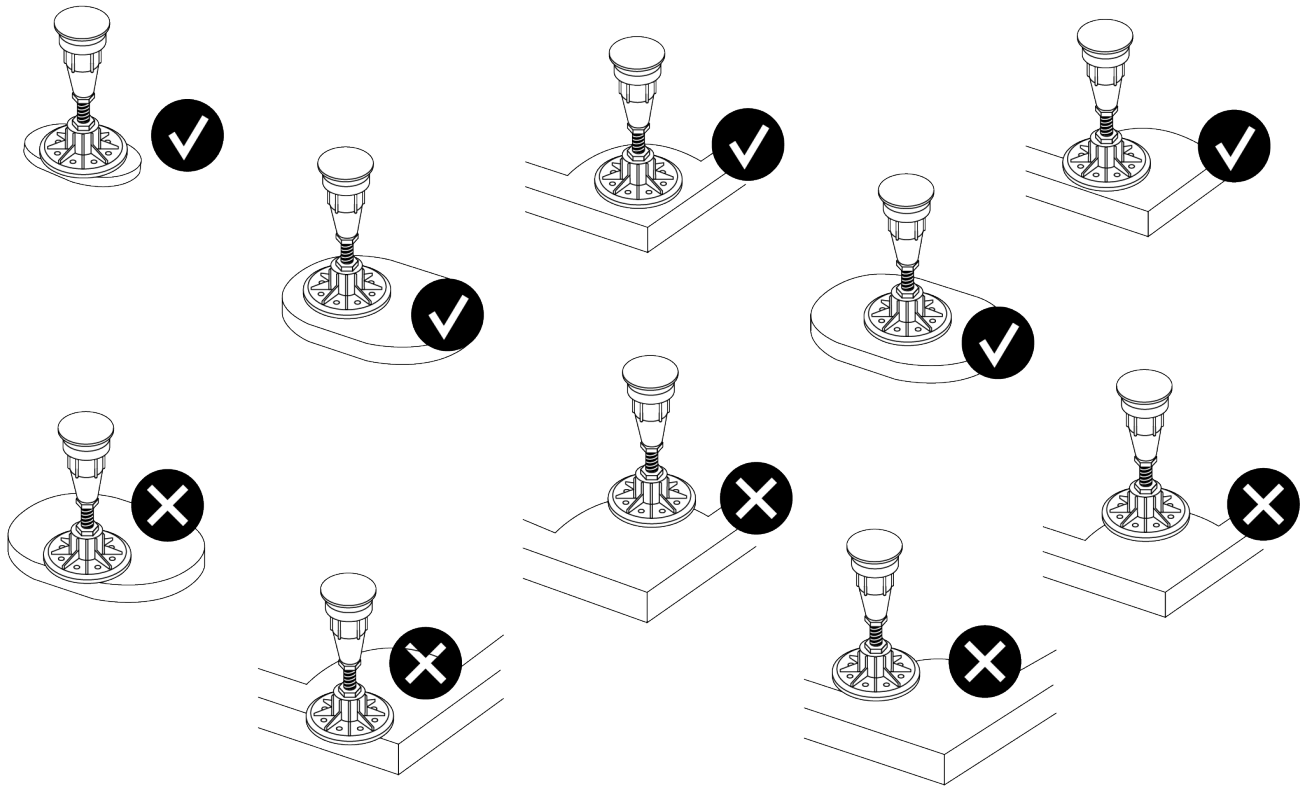

INSTALLATION - RISER KIT

6

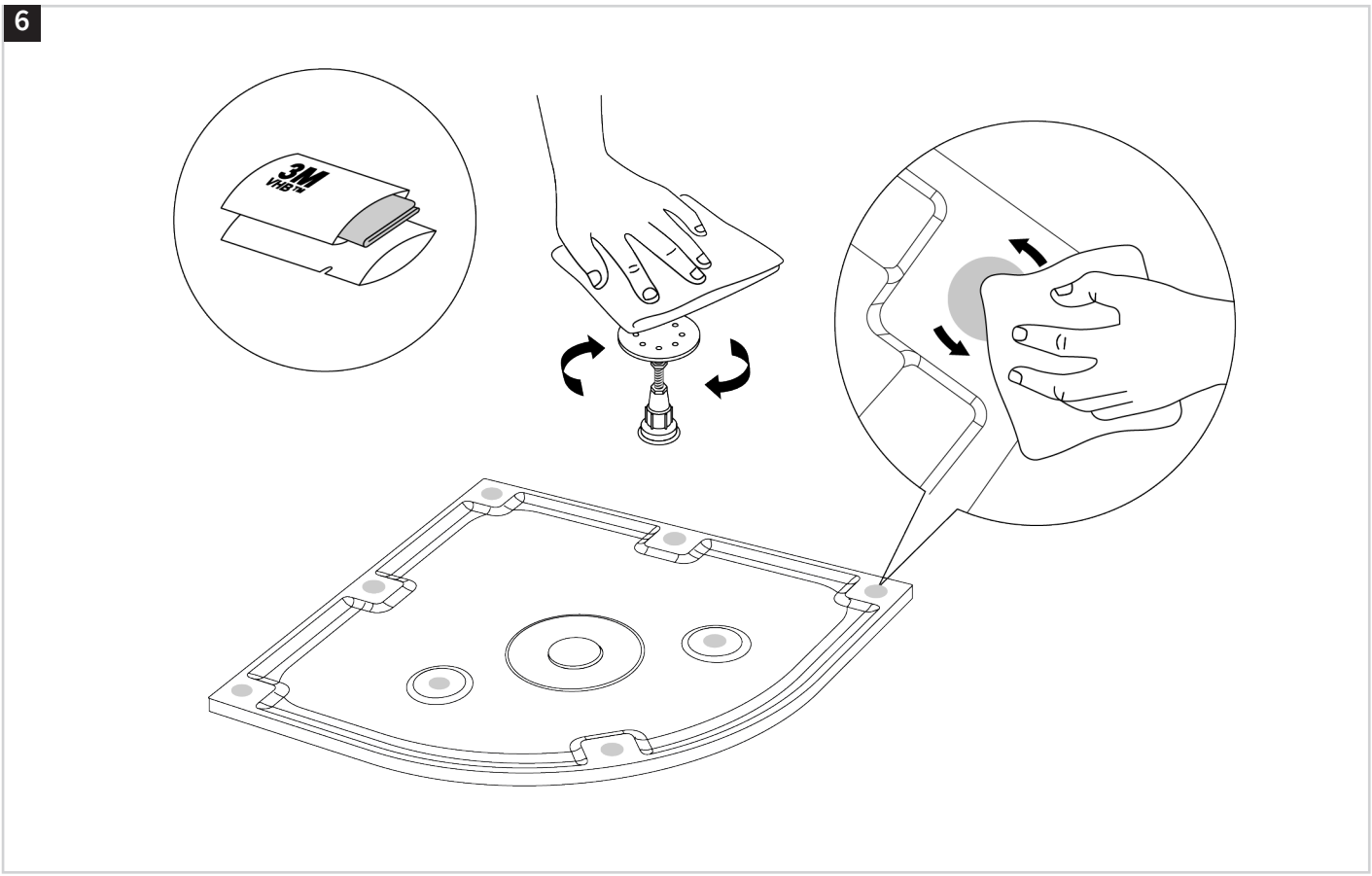

7

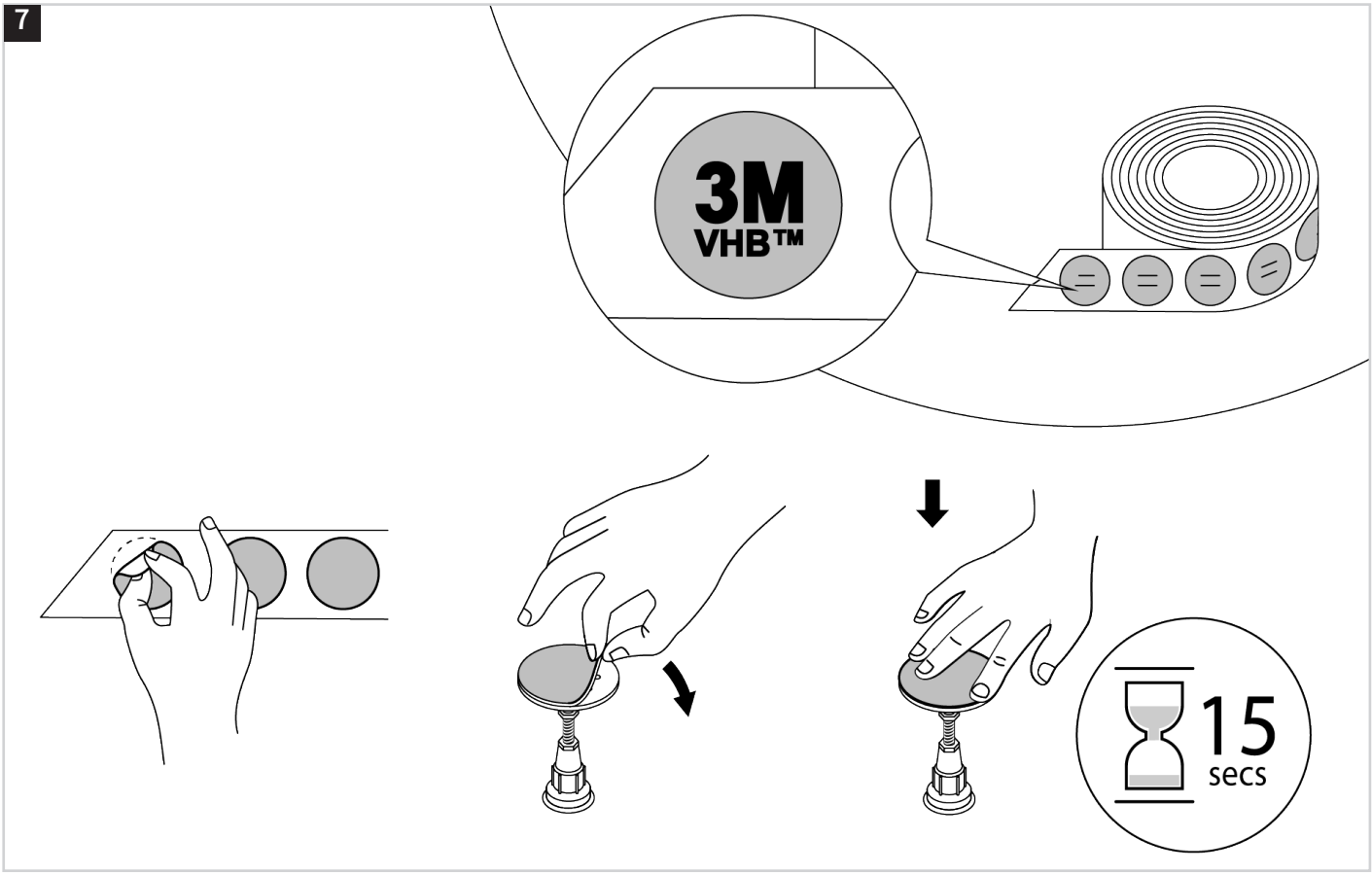

INSTALLATION - RISER KIT

8

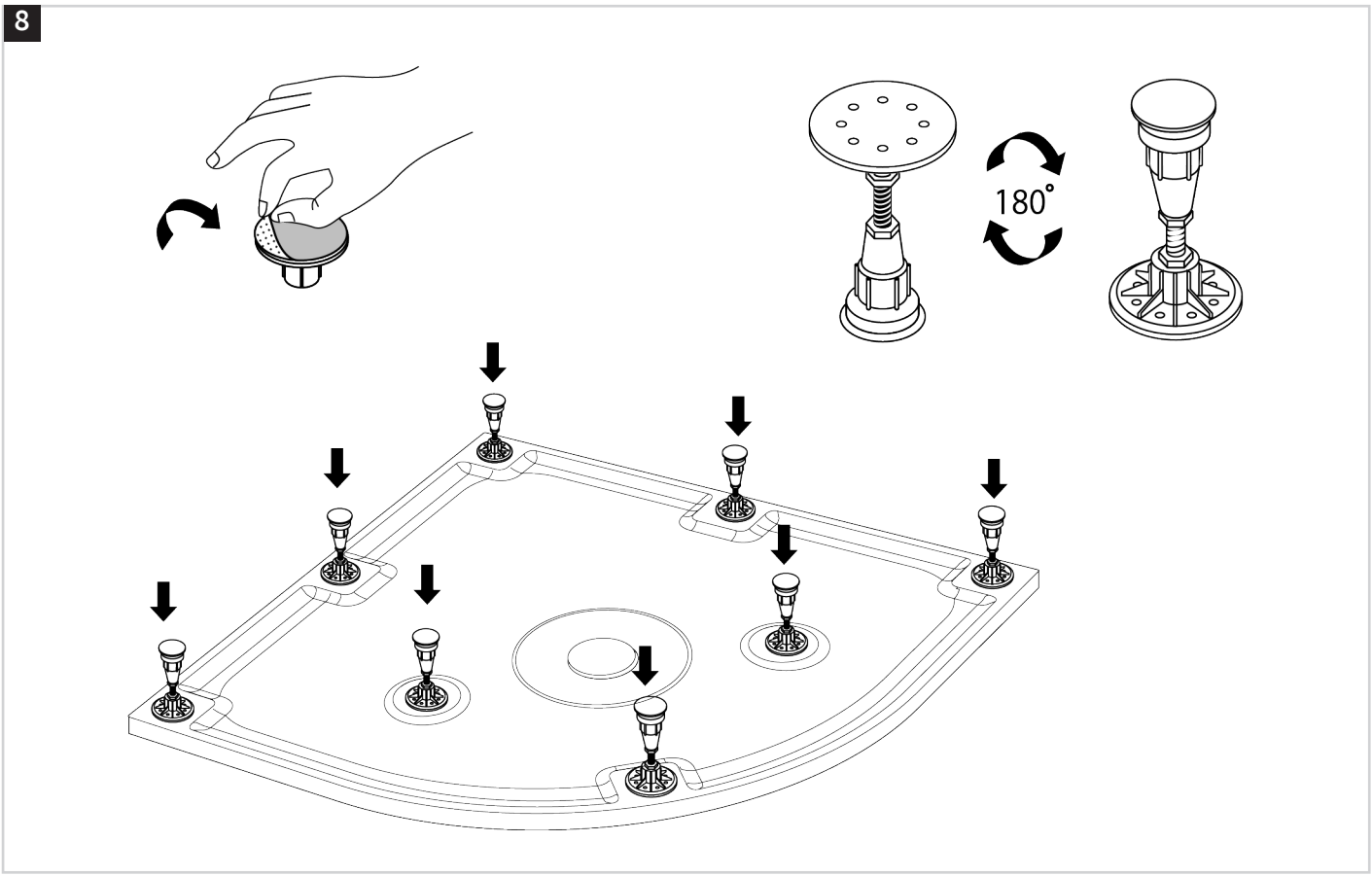

9

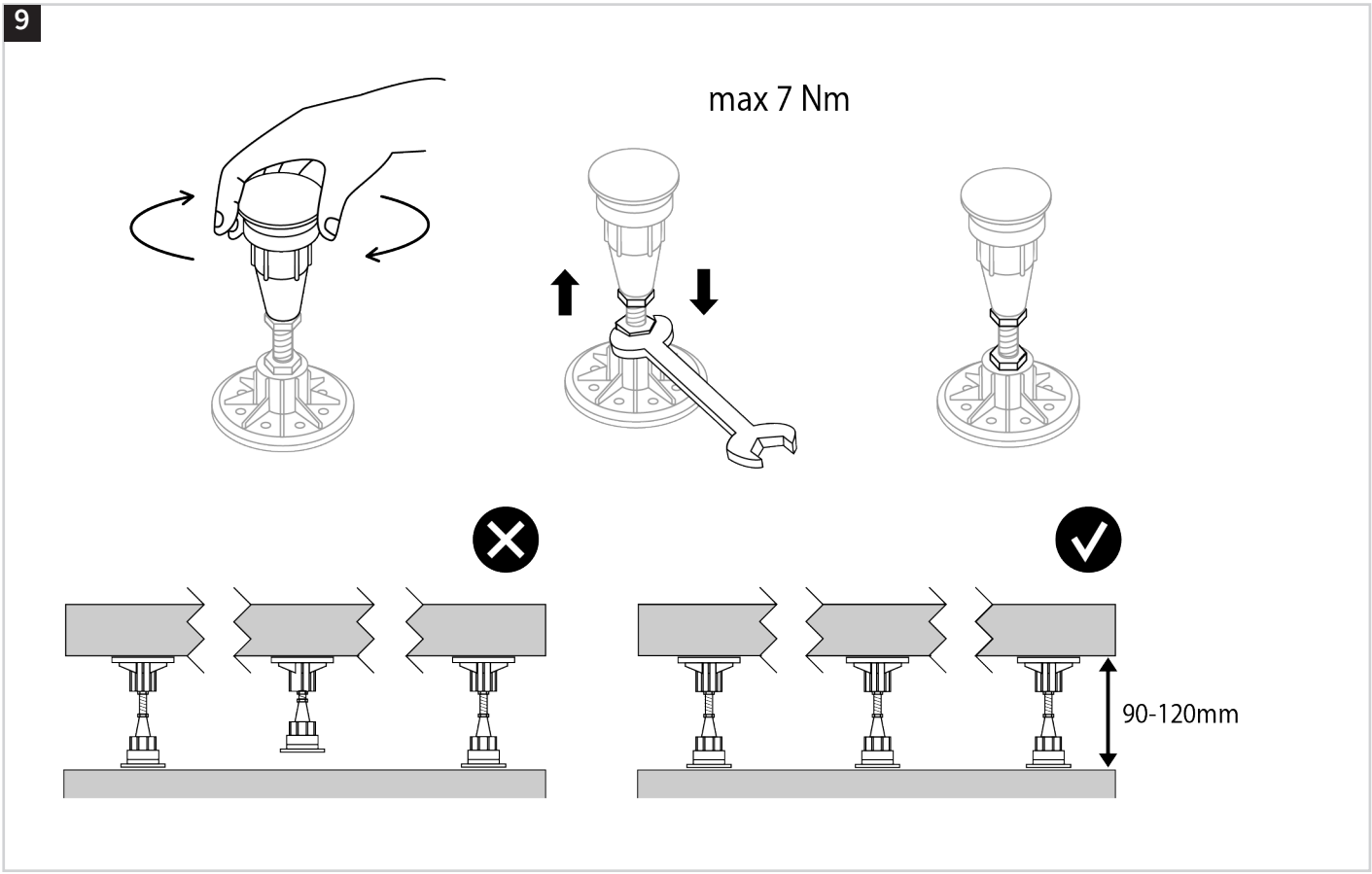

INSTALLATION - RISER KIT

10

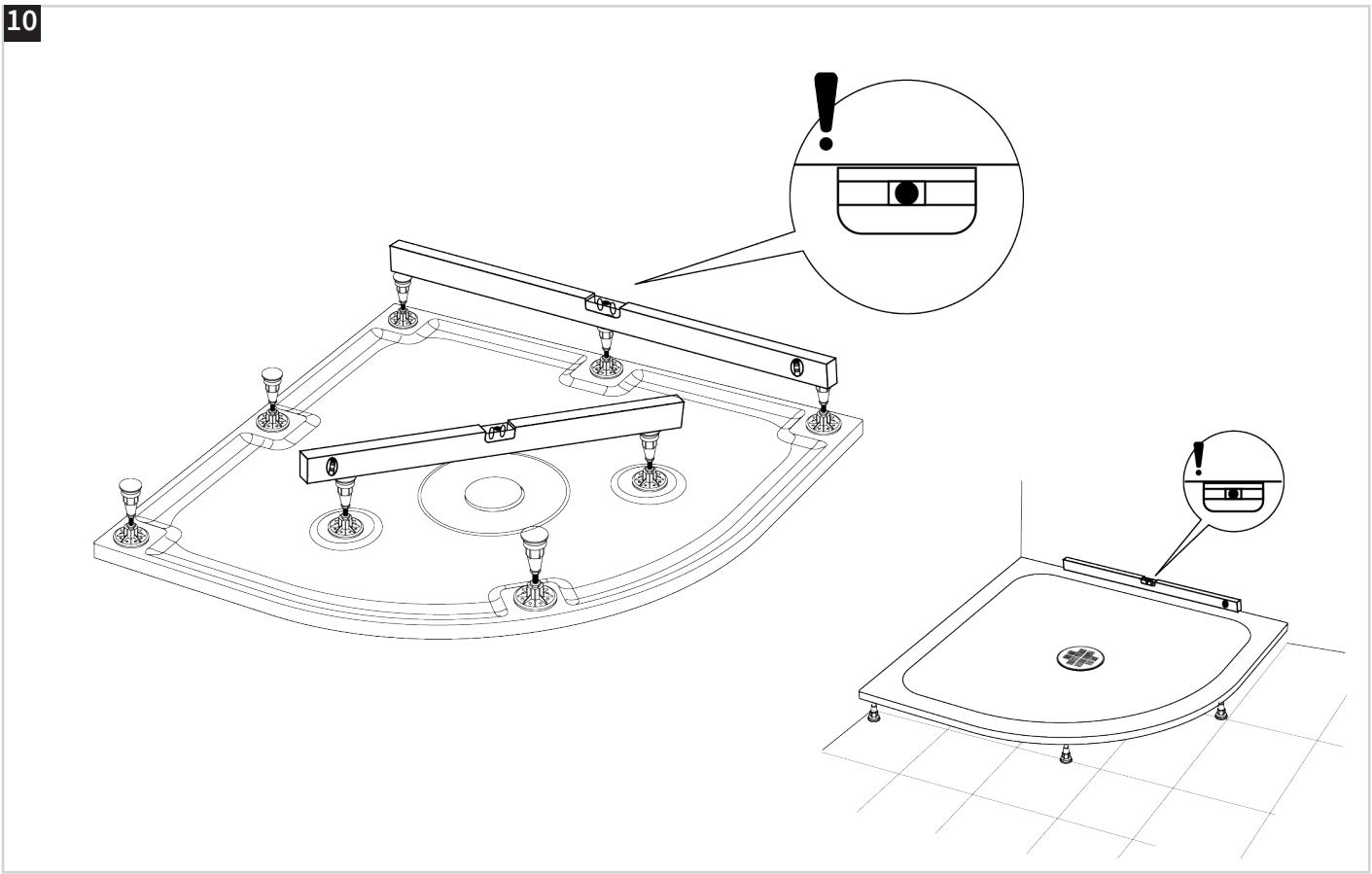

11

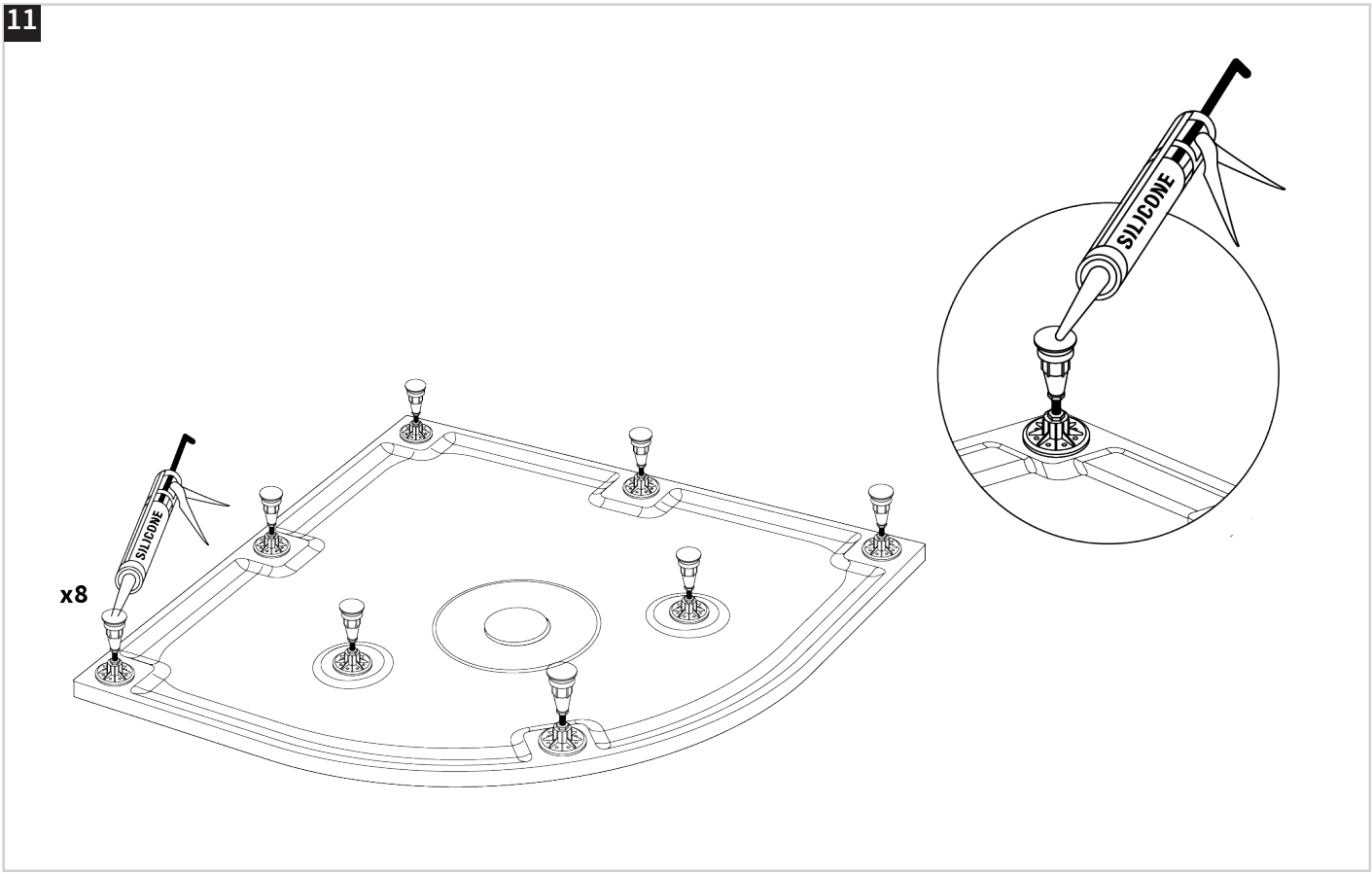

INSTALLATION - RISER KIT

12

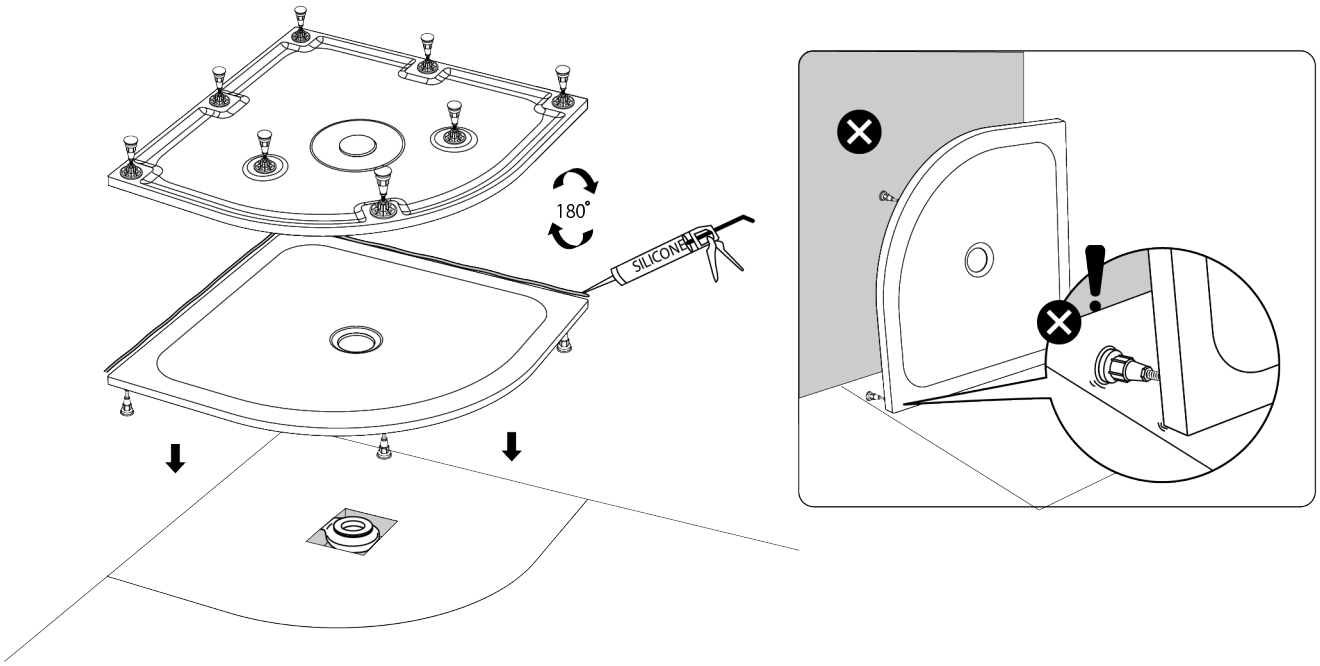

13

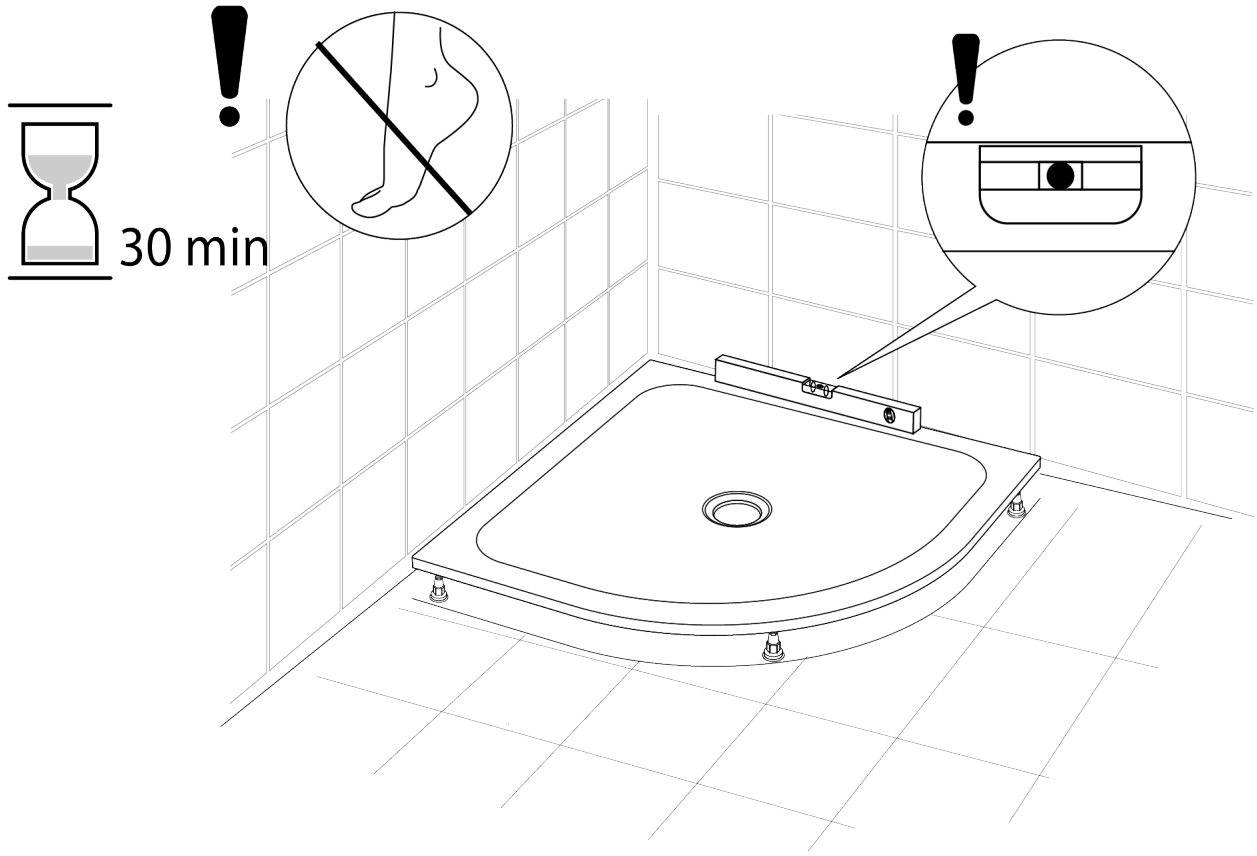

INSTALLATION - RISER KIT

14

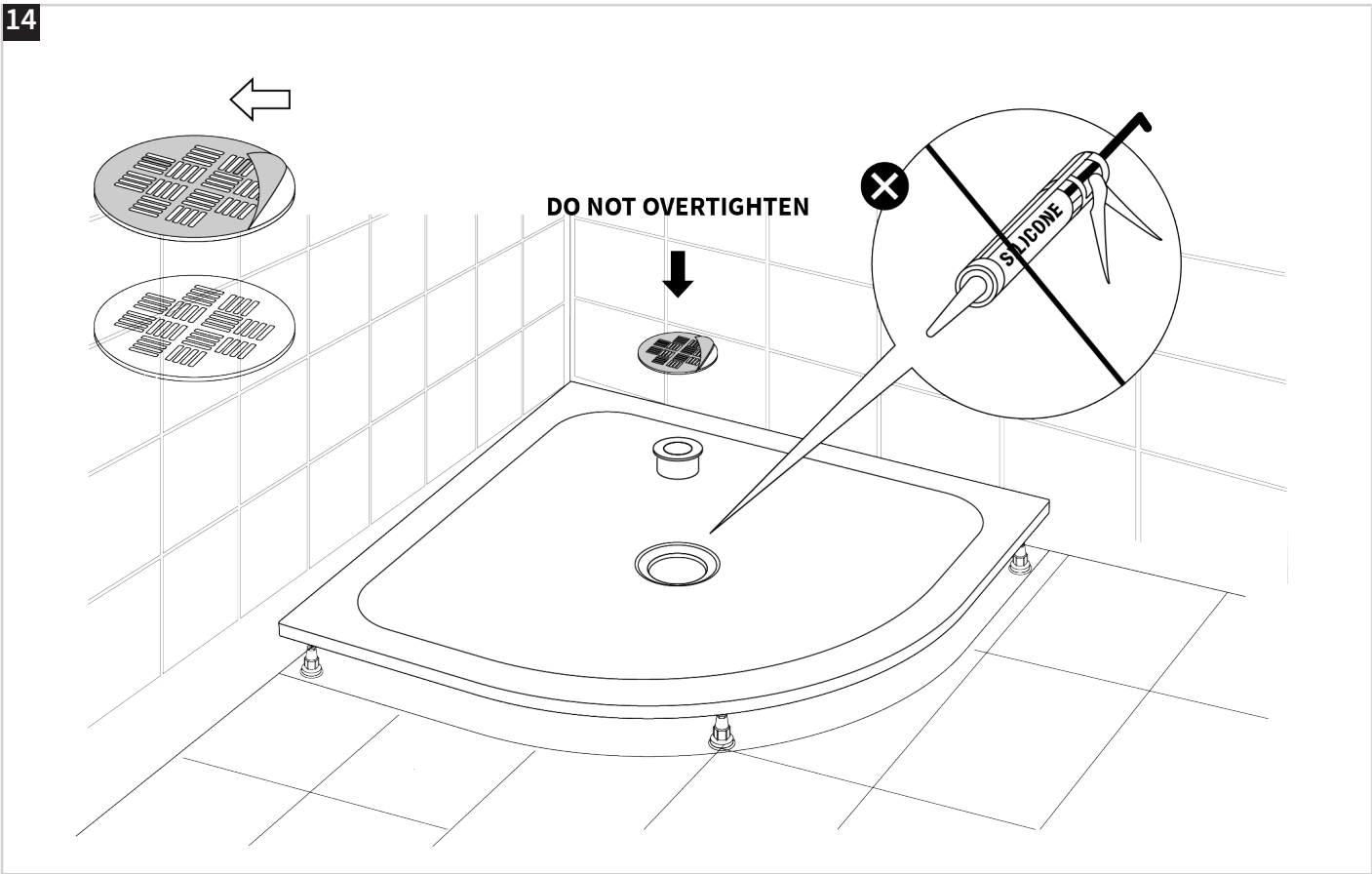

15

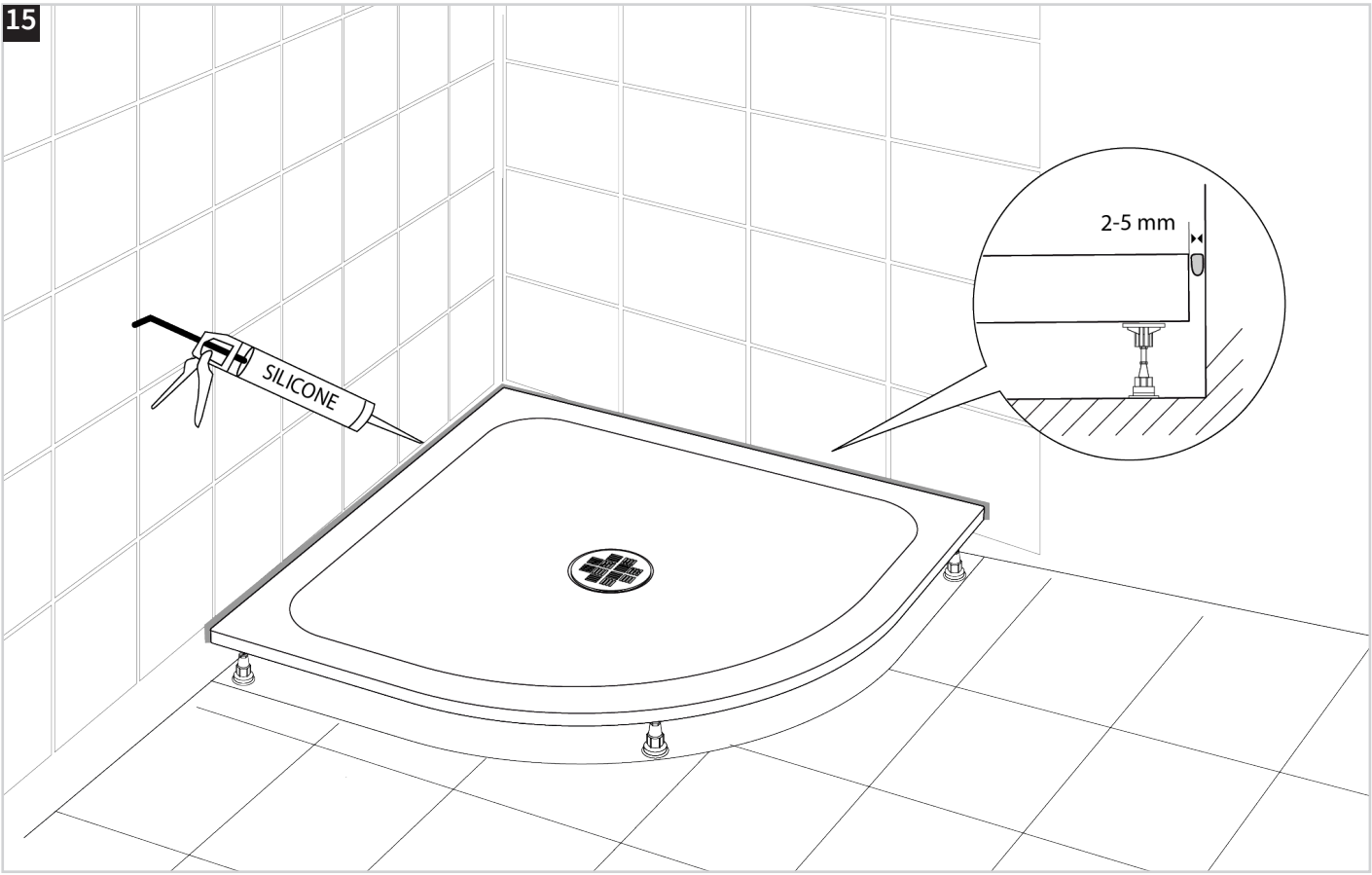

INSTALLATION - RISER KIT

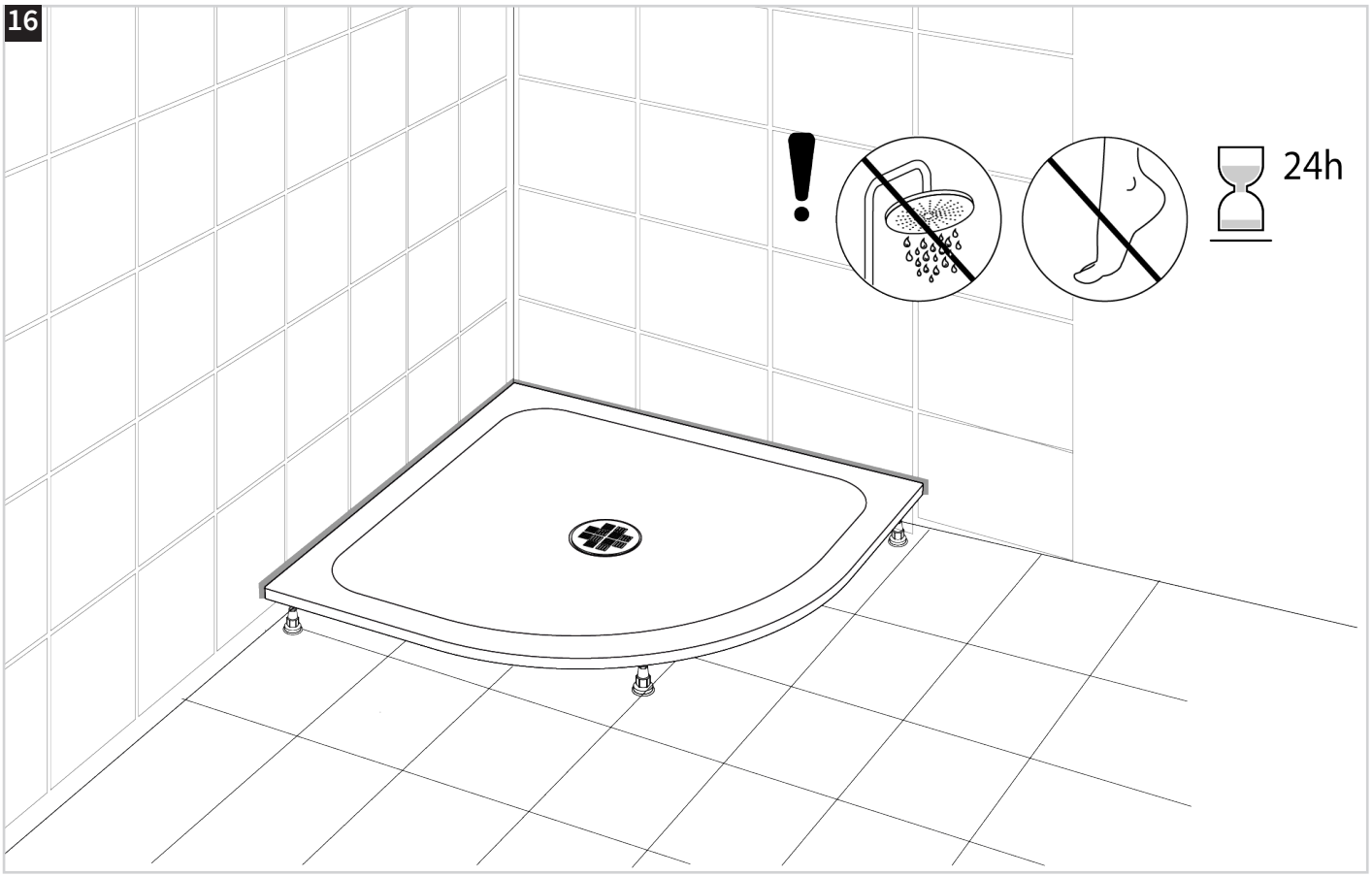

CREO SHOWER TRAY CUTTING INSTRUCTIONS

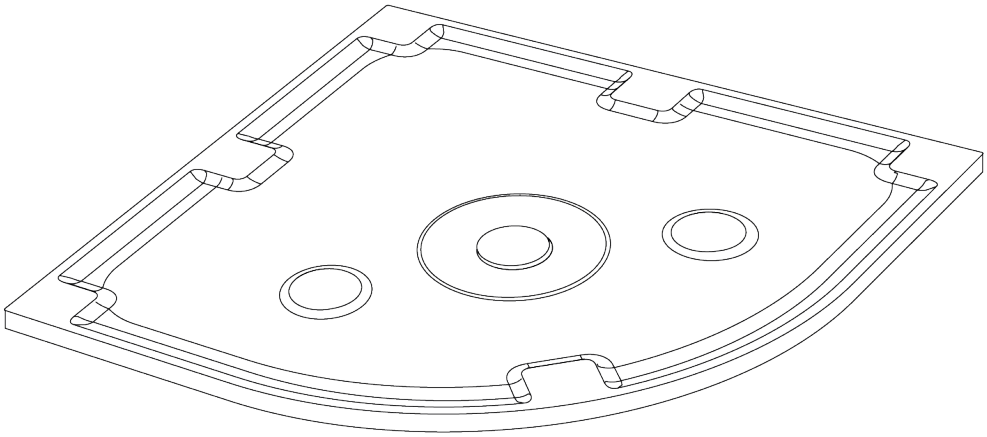

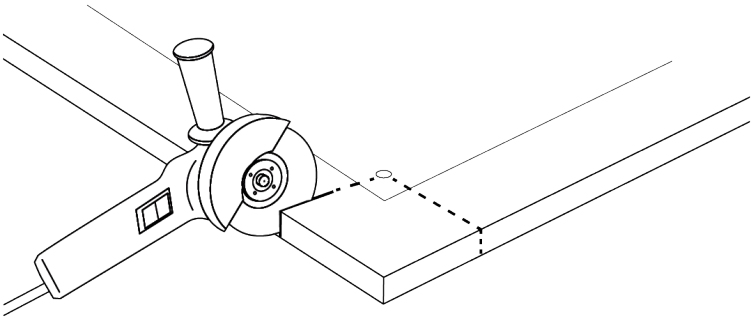

!

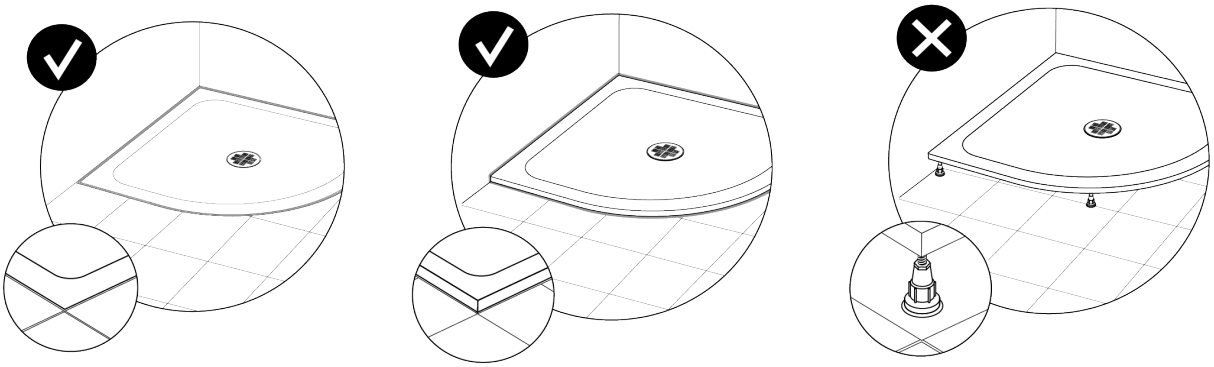

CREO SHOWER TRAY CUTTING INSTRUCTIONS

Important Pre-Installation Notes

Please note the following when cutting shower trays:

1. Wear gloves and protective glasses while cutting a shower tray.
2. Cut the shower tray using diamond blades intended for cutting concrete.
3. Do not use a drill in hammer/impact mode to drill holes in the shower tray.
4. After cutting, the shower tray must be installed on the floor using assembly adhesive only. Spread the adhesive over the entire surface of the product in accordance with the installation manual. Do not install the cut shower tray on legs.
5. The manufacturer does not bear any liability for damage caused as result of cutting the product.

Tools Required (not supplied):

Drill 6mm Diameter		Pencil	
Tape Measure		Circular Hand Saw With New Diamond Cutting Blade	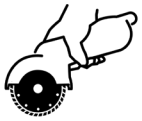
Gloves		P300 Sandpaper & Sanding Block	
Safety Glasses		Water Resistant PU Adhesive	

CREO SHOWER TRAY CUTTING INSTRUCTIONS

1

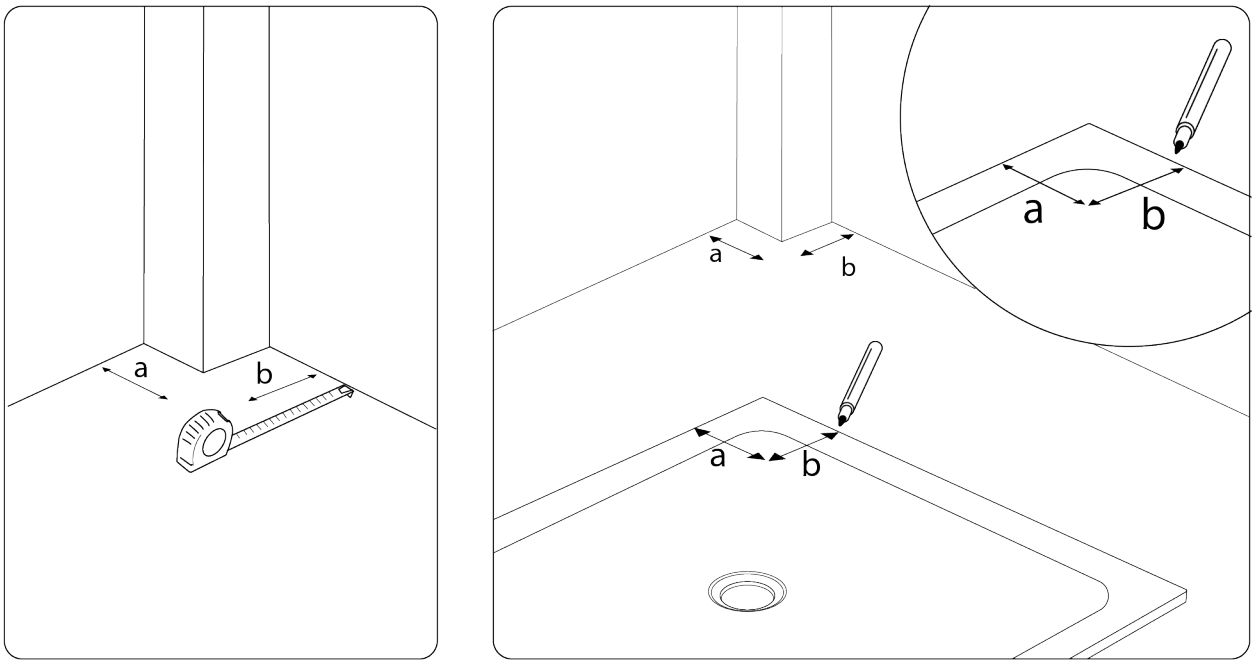

2

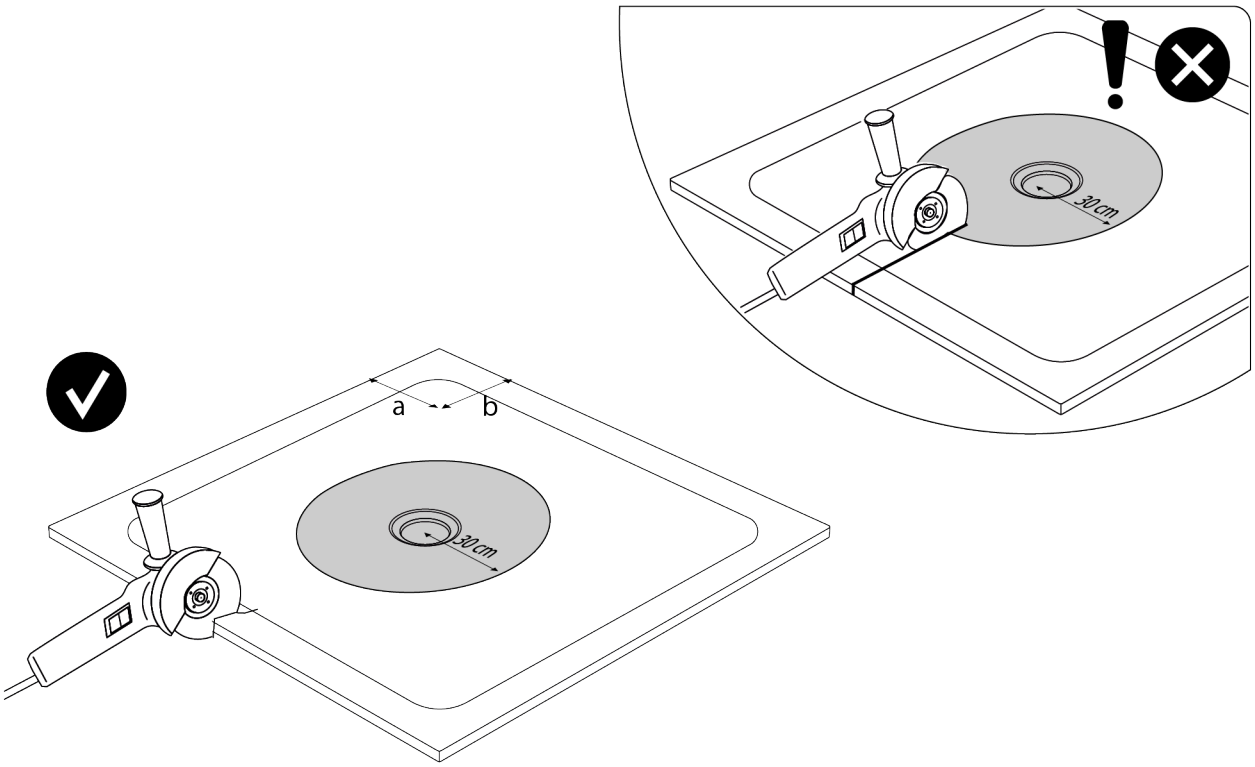

CREO SHOWER TRAY CUTTING INSTRUCTIONS

3

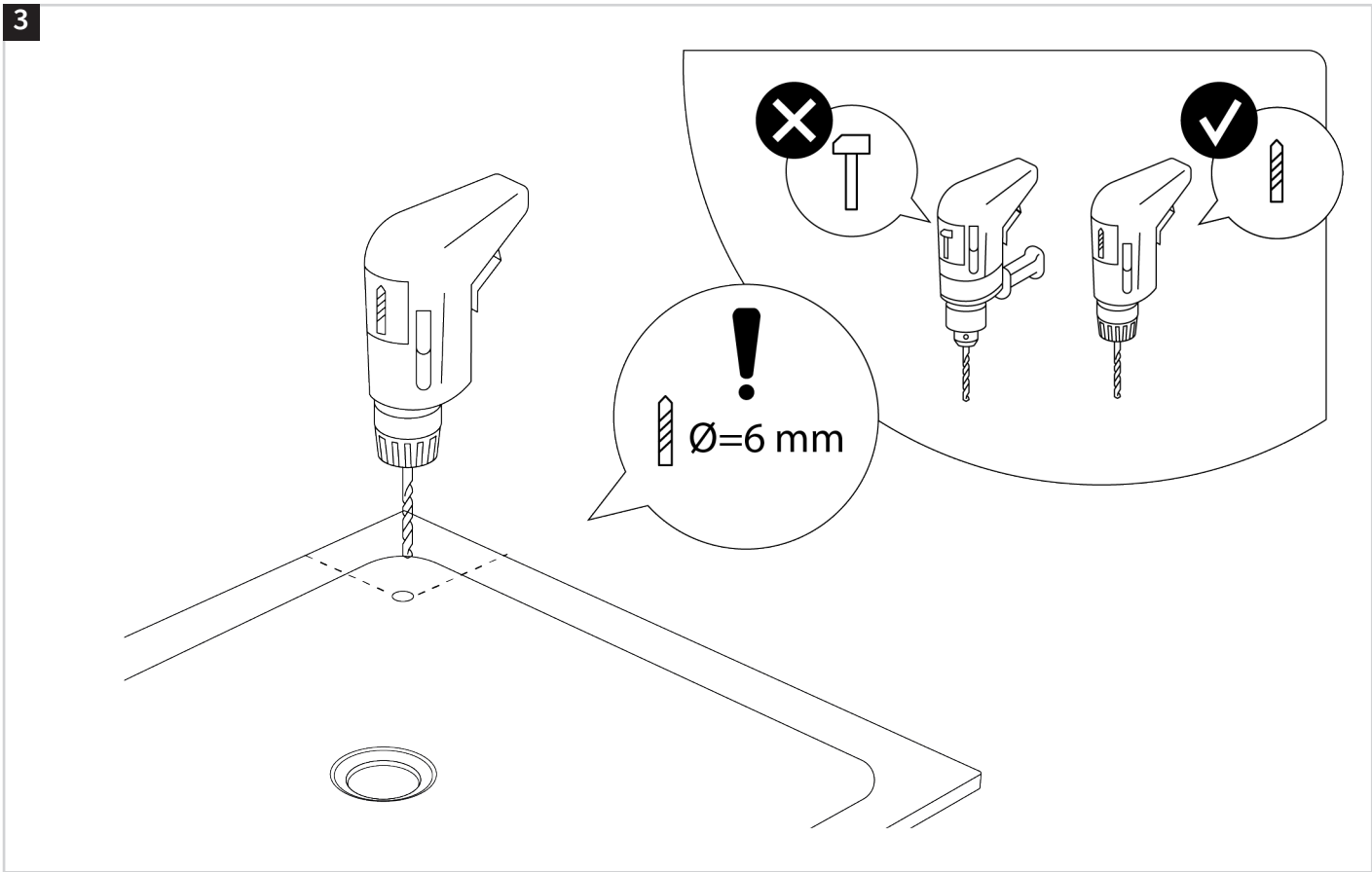

4

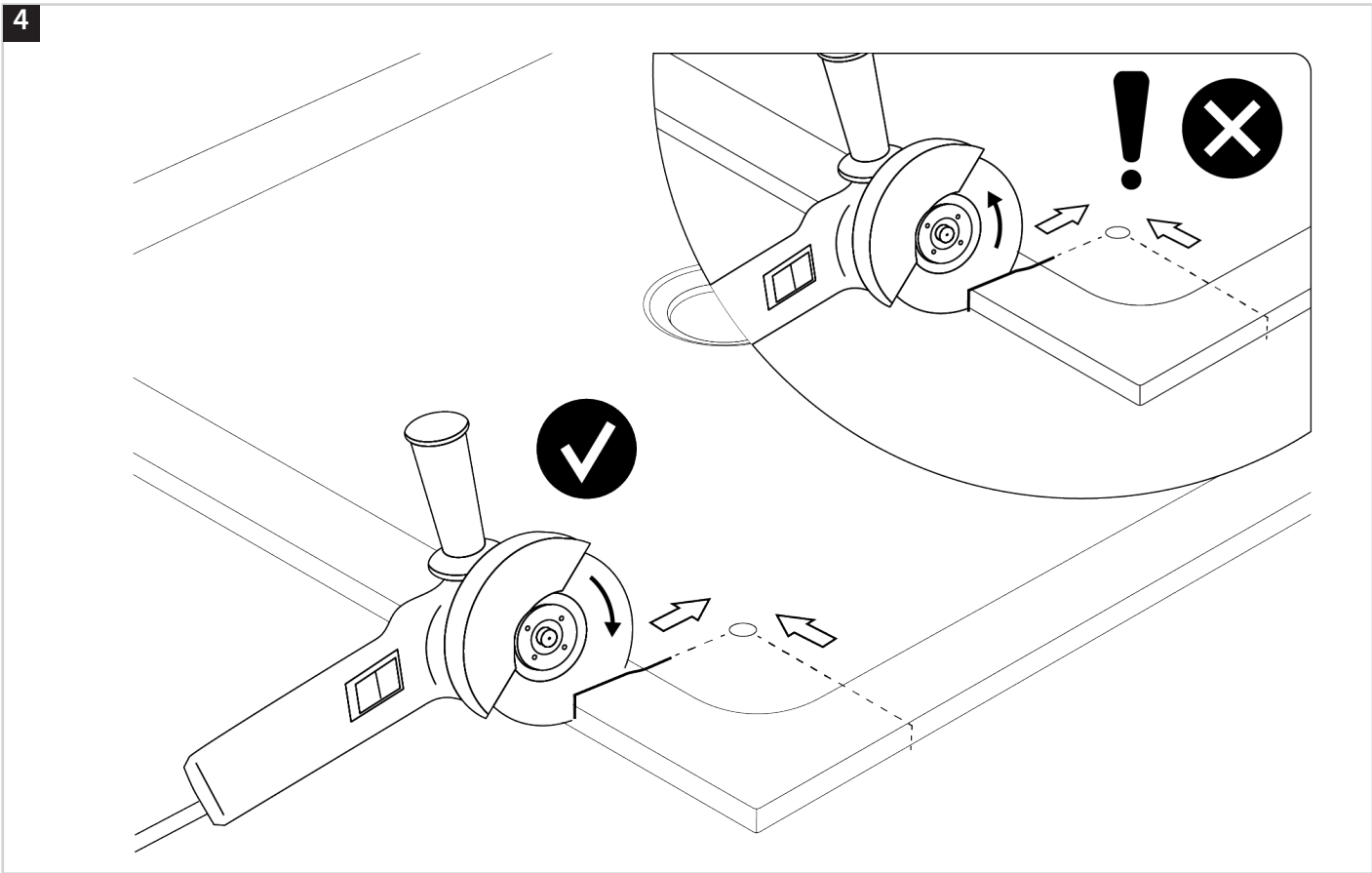

CREO SHOWER TRAY CUTTING INSTRUCTIONS

5

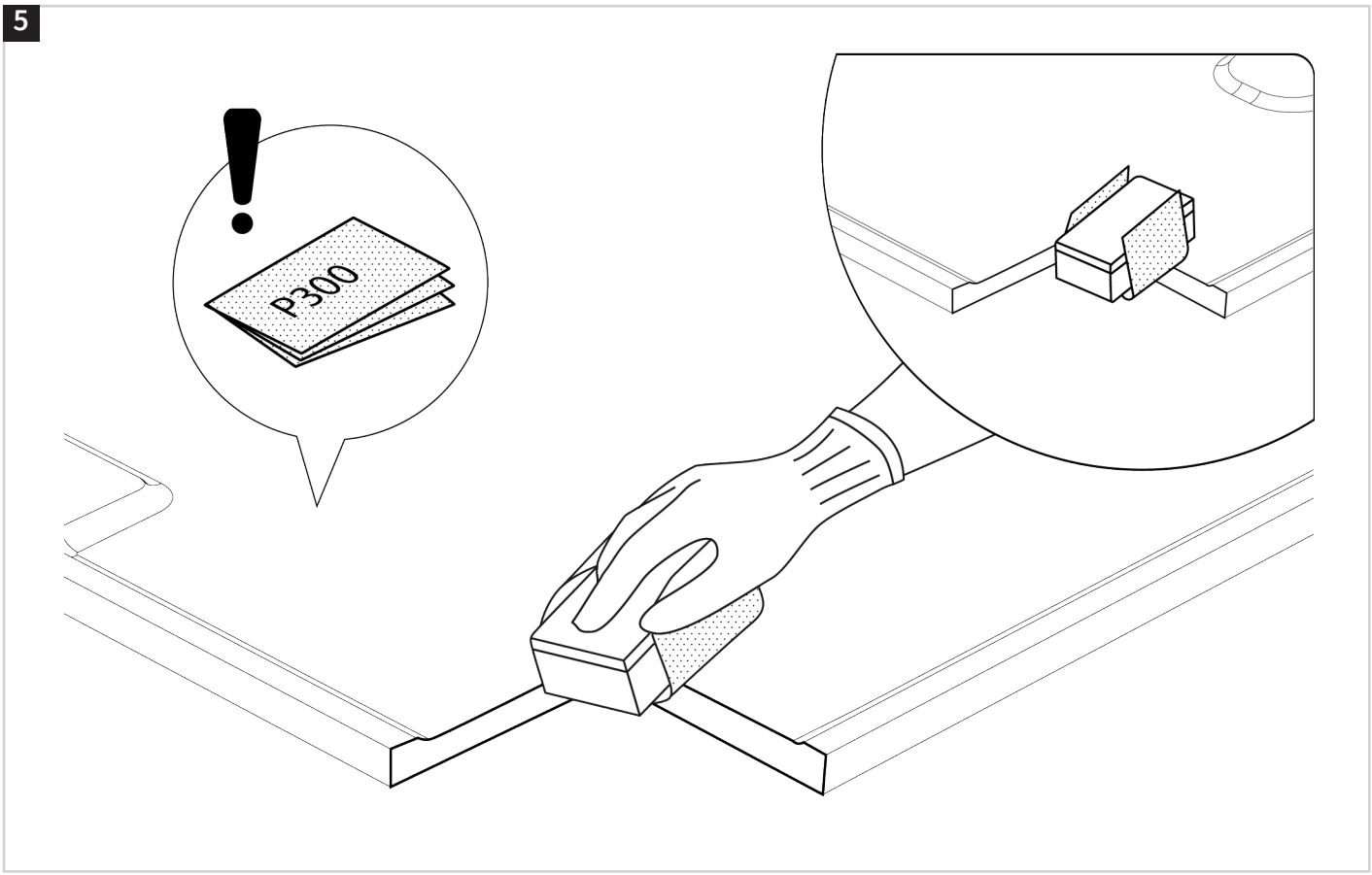

6

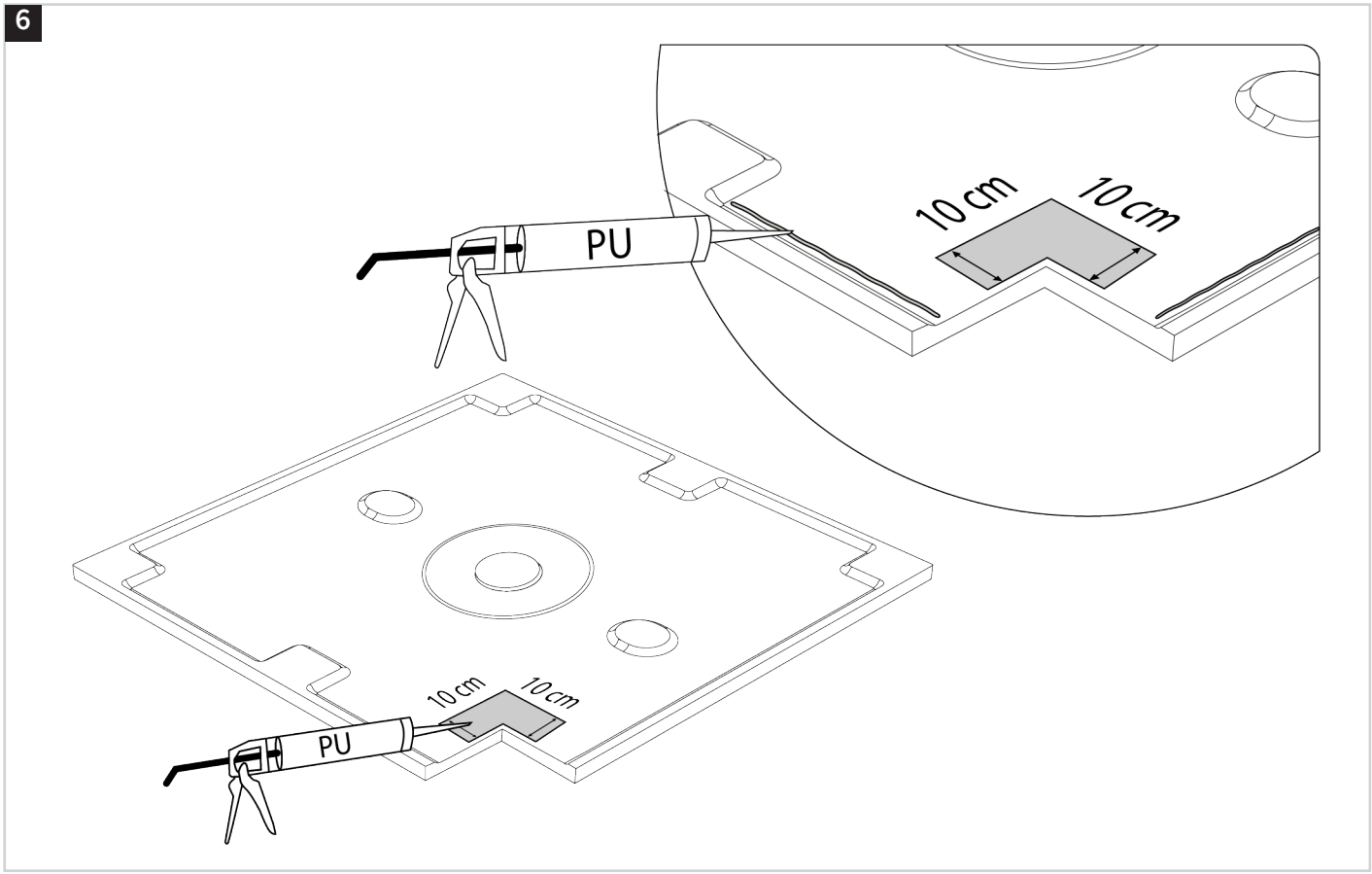

CREO SHOWER TRAY CUTTING INSTRUCTIONS

7 **LAST STEP FOR:**

PU Adhesive onto marine plywood or tiled floor:

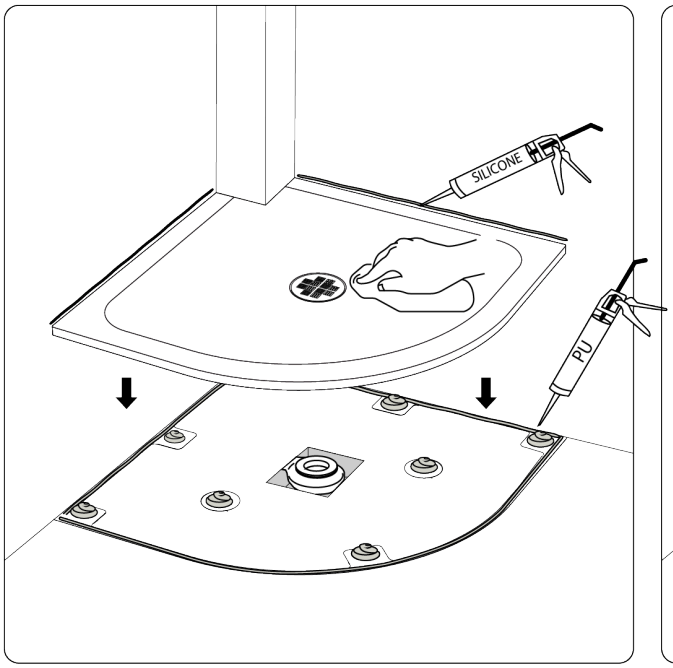

Mortar Board Bed:

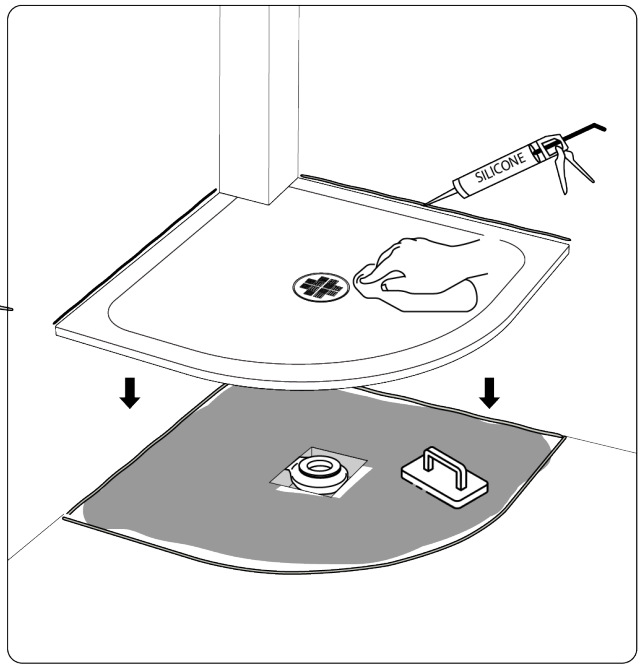

CARE & MAINTENANCE

The surface of all our products is among the highest quality surfaces available, made of Mineral Composite. With normal use, the surface will retain its beauty with only a minimal amount of care.

ABOUT THE MINERAL COMPOSITE

Every Mineral Composite product has a minimum dolomite content of 75%. It's external surface is covered with Nanocoat. The material fully utilises the properties of dolomite stone, while being reinforced with a flexible resin binder to ensure resistance under load, damage from impact and the effects of high and low temperatures.

Products made from Mineral Composite maintain an optimal temperature for a long time. They are always warm to the touch and provide unprecedented comfort in the bathroom.

Due to the inherent strength of the Nanocoat surface products are always pleasant to the touch and have a smooth finish. Mineral Composites insusceptibility to bacterial growth, absorption of water and chemical substances, ensure a long lasting quality and ease of care.

For standard cleaning, gloss and matt finishes, we recommend using widely available non-abrasive cleaning products. The matt finish may occasionally require a mildly abrasive product.

NOTE

To maintain the beauty of the product's surface and avoid unwanted stains from hair dye, cosmetics and other strong coloured products we strongly recommend the immediate removal.

The temperature of the water should never exceed 75°C for a bath or/and shower tray. Avoid any cleaning products that contain natural or artificial dyes, test product on an inconspicuous area before using. Improper use may damage products and invalidate the warranty.

RECOMMENDED FOR GLOSS FINISHES

1. For regular cleaning use of universal cleaning agents with non-abrasive properties, or any mild dish soap and water or product specifically made for gloss surfaces.
2. After each use rinse the tray with water and dry with a cotton cloth. This will assist build up of limescale and soap residue.
3. In order to maintain the product aesthetics we recommend using natural polishing wax, for example, based on beeswax, once per month.
4. Stubborn stains, grease, mildew, cosmetic residue must be treated with warm water and gentle non-abrasive cleaning agents or a soap solution with water.
5. Never use any abrasive cleaners, or products containing bleach.
6. Small scratches can be removed by using Crosswater polishing paste - see below.
7. Scratches on the surface may be treated with abrasive paper soaked in water. First try a 1500 grit paper, then if needed try a 3000 grit paper. Afterwards, the surface may be polished with a fine grained polishing paste (for painted surface).
8. Limescale may be treated with a solution of water and vinegar

SCRATCHED OR DAMAGED SURFACES

To repair scratched or damaged surfaces please see point 7. The after care kits below are available for white gloss shower trays.

MINERALPOLISH Cast Mineral Marble Polishing Compound

MINERALREPAIRKITWG Cast Mineral Marble Repair Kit

MINERALTOUCHKITWG Cast Mineral Marble Touch Up Kit

Lake View House
Rennie Drive, Dartford
Kent DA1 5FU
United Kingdom
0345 873 8840
www.crosswater.co.uk

Part of the
Bathroom Brands Group

We reserve the right to make technical modifications without prior notice.

Optix 10 Quadrant

Manufactured to: BS EN 14428

IMPORTANT
BEFORE STARTING THE INSTALLATION ENSURE ALL THE DOOR SIZE MEASUREMENTS CORRESPOND WITH THE INSTALLATION AREA INCLUNDING THE FINISHED TILED/PANELLED WALLS.
RETURNS DUE TO INCORRECT SIZING WILL NOT BE ACCEPTED.

Requires a tray with minimum 60mm wide flat edge and 550mm radius.

OPTIX QUAD 900x900	94kgs
OPTIX QUAD 1000x800	92kgs
OPTIX QUAD 1200x800	103kgs
OPTIX QUAD 1200x900	109kgs

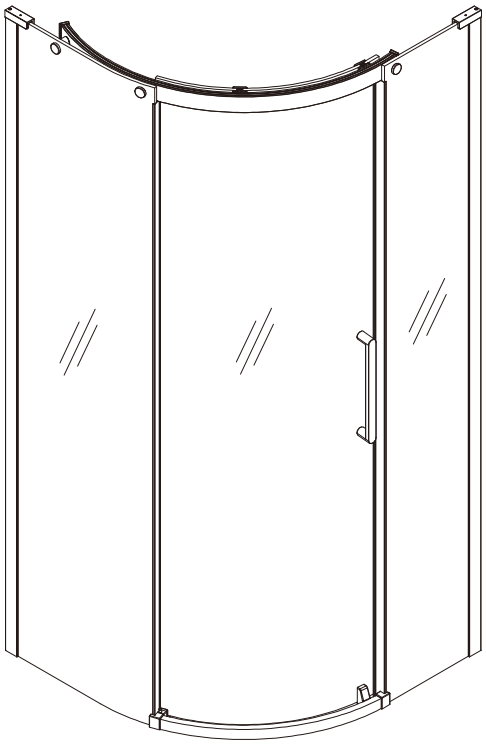

Door opens to the left

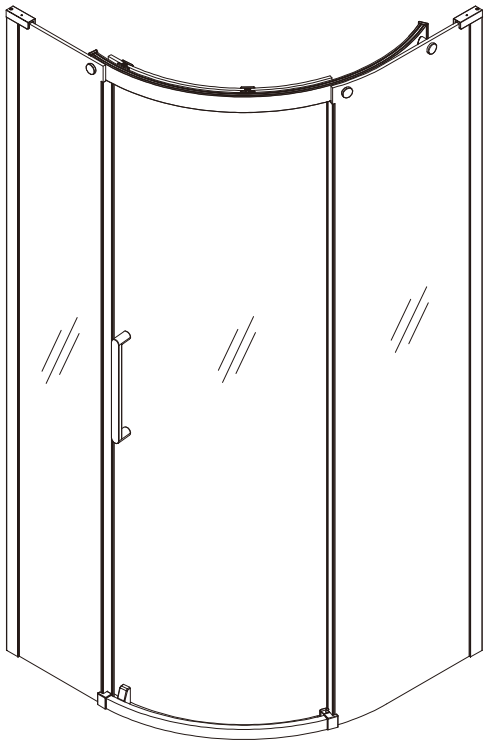

Door opens to the right

Optix 10 Quadrant

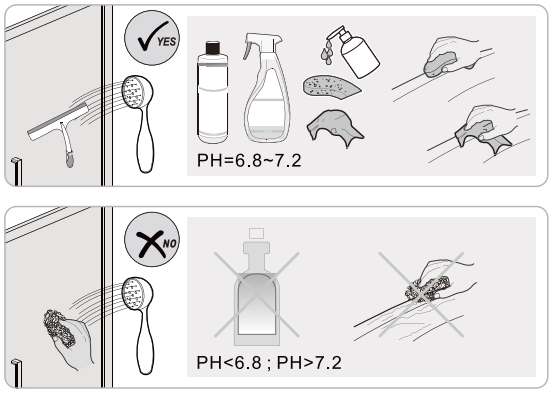

INSTALLATION INSTRUCTIONS

crosswater®

A

IMPORTANT - Please read before installation

Please read these instructions carefully before starting installation and keep in a safe place for future reference. Make a note of the model number.

Check the contents of the pack carefully before installation. Crosswater will not be held responsible for any de-fit / re-fit costs where faulty product has been fitted.
If any fault is found with materials or workmanship, it must be reported immediately to the manufacturer. Remedial action will be taken, based on information received, on condition that:
1. Full details are supplied to the manufacturer;
2. The shower door has not been modified or tampered with.
3. The supplied install components have been used,
4. The manufacturer is informed of any damage/shortages prior to installation.

We do not accept responsibility for any problems that may occur through incorrect installation.

The success of the installation and operation of any shower door is, of course, dependant on the squareness, alignment and construction of the walls to which fixing is to be carried out.

VERY IMPORTANT
You must complete all tiling and grouting, and the shower tray **MUST** be level and fully sealed to the tiles before installation. If you do not fit the shower door onto a tiled surface, or seal the tiles to the tray before installation, water may enter into the wall behind the wall profiles.

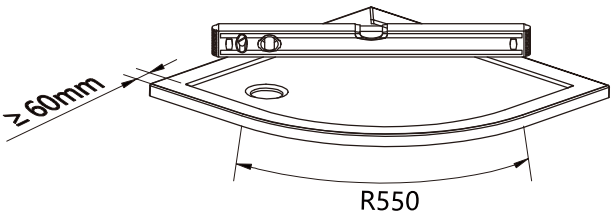

Optix quads require a shower tray with minimum 60mm flat/level outside edge. and 550mm radius.

The shower waste needs to be fitted in accordance with manufacturer's guidelines.

INSTALLATION - Advise and safety

The installation instructions are based on typical use and conditions.

All doors are designed to open outwards only.

Ensure that the product can be fixed to a solid masonry/brick wall or suitable timber stud work grade C16-C24 in the area behind the wall profile and wall brackets.

These hints have been prepared for your guidance, you must exercise due care at all times.

For Health and Safety 2 people must carry out the installation of this shower enclosure.

Handle glass with care. Although the glass supplied is toughened safety glass(**EN12150**), impacts can damage both the glass and the frame.

If fitting a tray we recommend a drainage test is carried out before the tray is tiled in position.

Warning!
Please check for any hidden pipes or cables before drilling holes in the wall.

When using power tools always follow the manufacturers user instructions.

Leave the silicone sealant to dry for 24 hours before using the shower door.

CARE AND CLEANING

Do not use solvents or abrasive material or chemicals to clean the shower door.

Only clean using soapy water and soft cloth, rinse thoroughly afterwards.

INSTALLATION - Left and Right hand

The door has left and right hand versions.
This instruction shows the RIGHT HAND installation. Reverse for LEFT HAND opening.

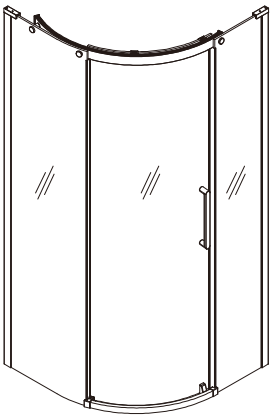

Door opens to left

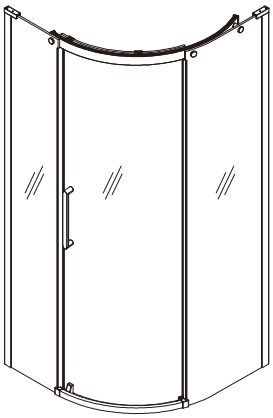

Door opens to right

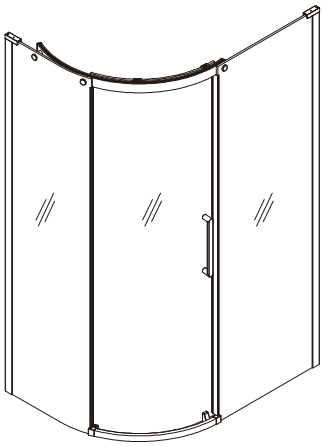

Door opens to left

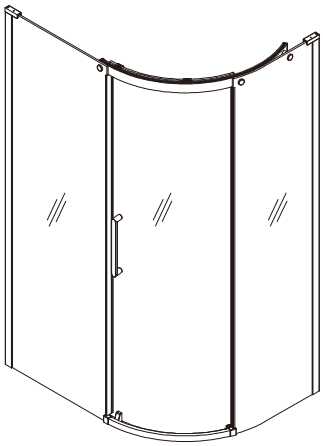

Door opens to right

crosswater

Optix 10 Quadrant

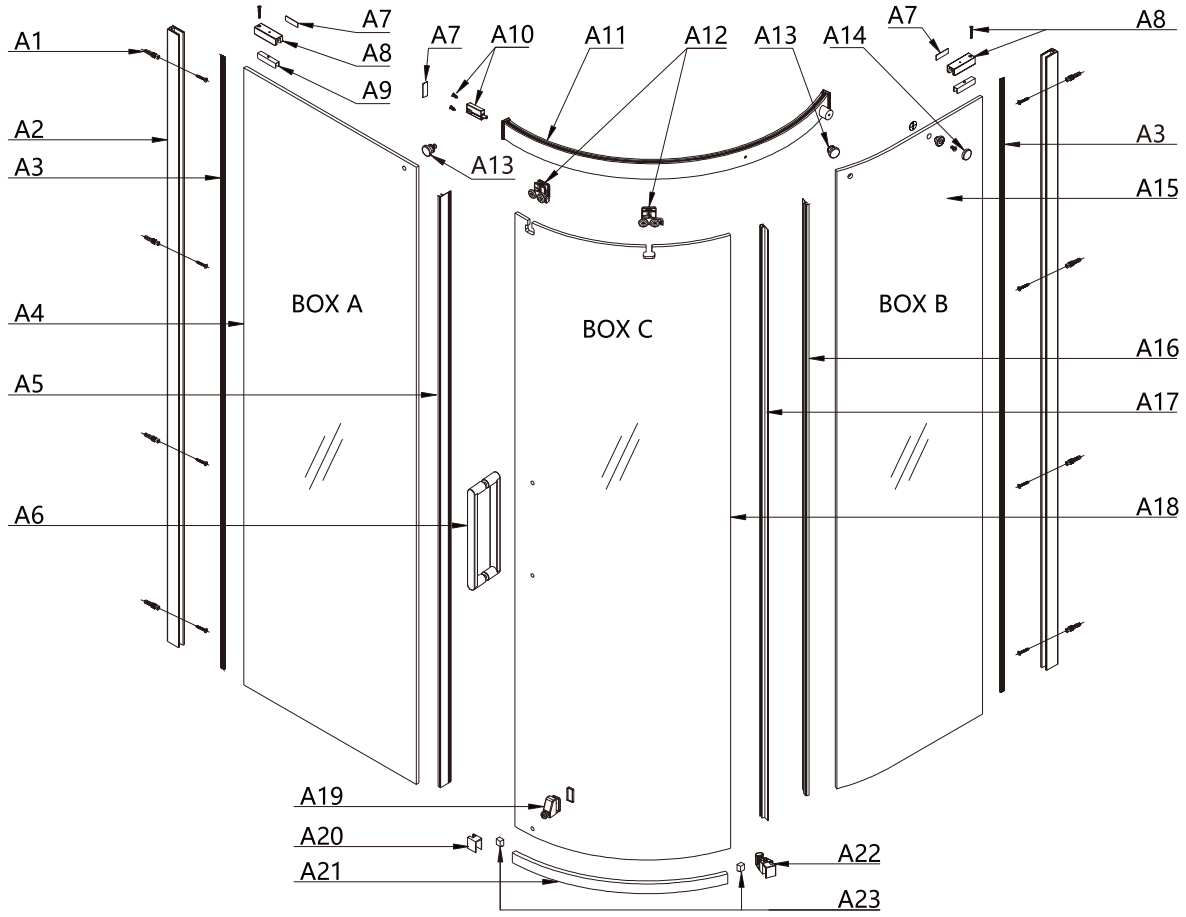

A 1	Wall plug and 4x50mm screw	8+8
A 2	Wall profile	x2
A 3	Wall profile seal	x2
A 4	Flat fixed Glass	L R x1
A 5	Flat Glass Seal	x1
A 6	Handle	x1
A 7	Bracing Bar Screw Cover	x3
A 8	Bracing bar	Lx1 Rx1
A 9	Bracing bar gasket	x2
A 10	Top rail soft damper	L R x1
A 11	Top Profile	L R x1
A 12	Top roller	x2
A 13	Top Rail Fixing Pin	x2
A 14	Top Rail Fixing Pin Cover	x1
A 15	Curved Fixed Panel	L R x1
A 16	Fixed Curved Panel Vertical Seal	x1
A 17	Moving Curved Glass Vertical Seal L=1930mm	x1
A 18	Curved Moving Panel	L R x1
A 19	Bottom roller	x1 Replacement roller with spring x1* Only required if the door is out of alignment see page 10
A 20	Bottom profile cap	L R x1
A 21	Bottom Profile	L R x1
A 22	Bottom guide	L R x1
A 23	Bottom Profile Spacer	x2
A 24	Allen key	2mm x1 2.5mm x1 3mm x1 4mm x1 5mm x1

crosswater

Installation tools required - not included

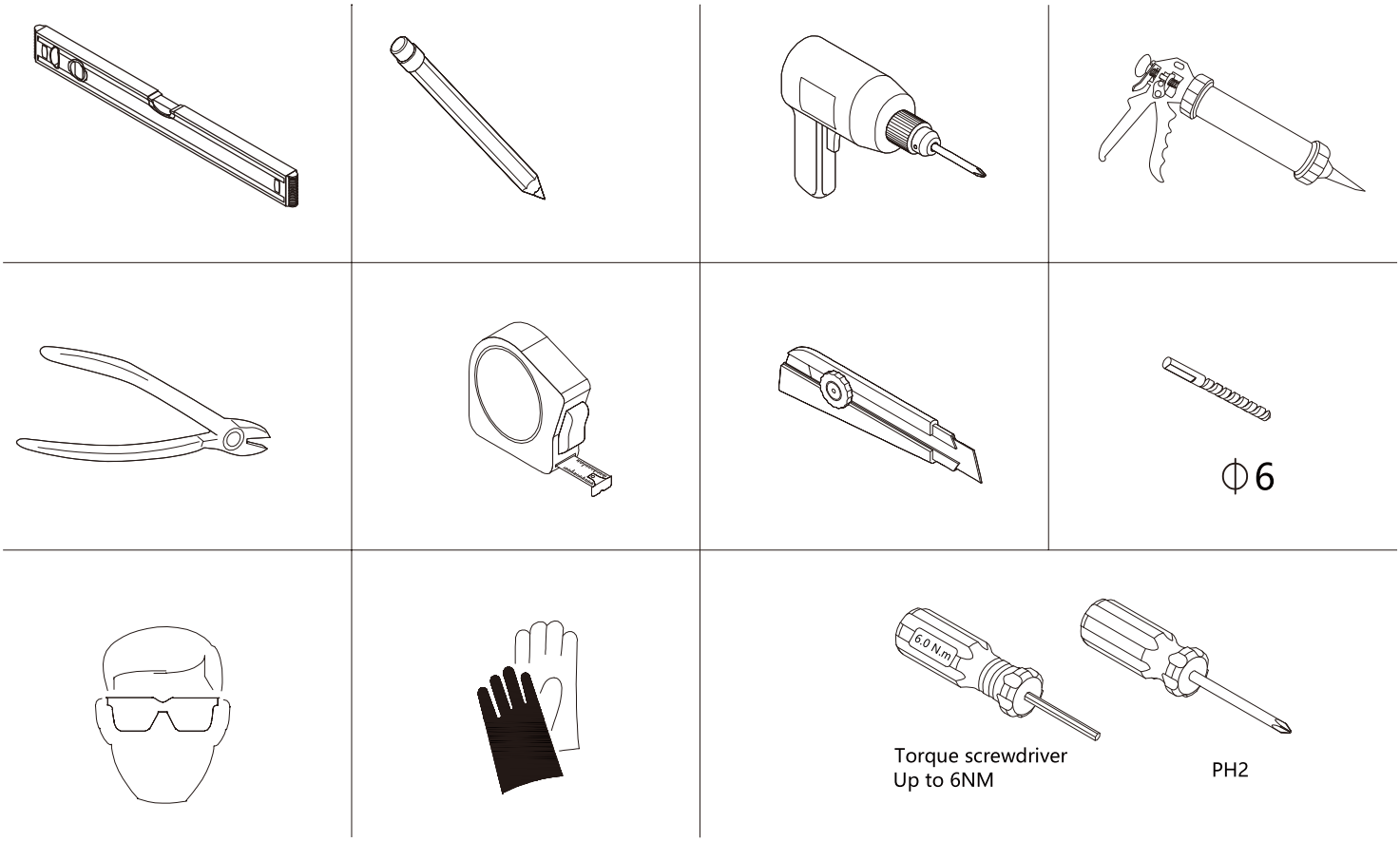

Step 1

LH	A	B
900x900	860-880mm	860-880mm
1000x800	960-980mm	760-780mm
1200x800	1160-1180mm	760-780mm
1200x900	1160-1180mm	860-880mm

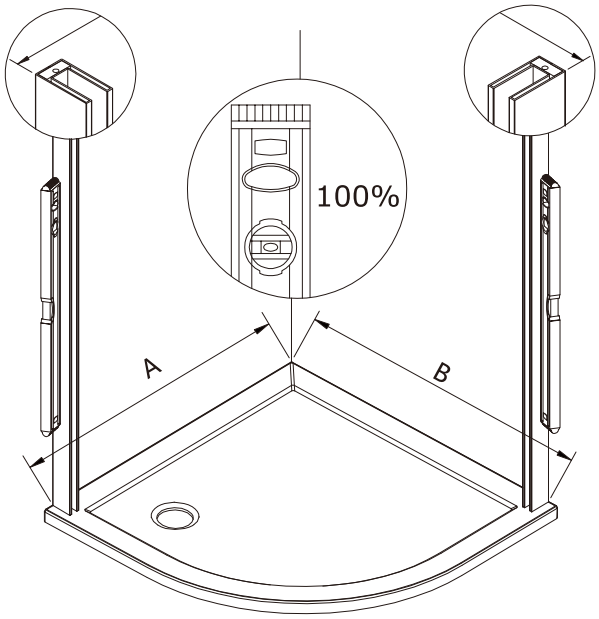

RH	A	B
900x900	860-880mm	860-880mm
1000x800	760-780mm	960-980mm
1200x800	760-780mm	1160-1180mm
1200x900	860-880mm	1160-1180mm

Step 2

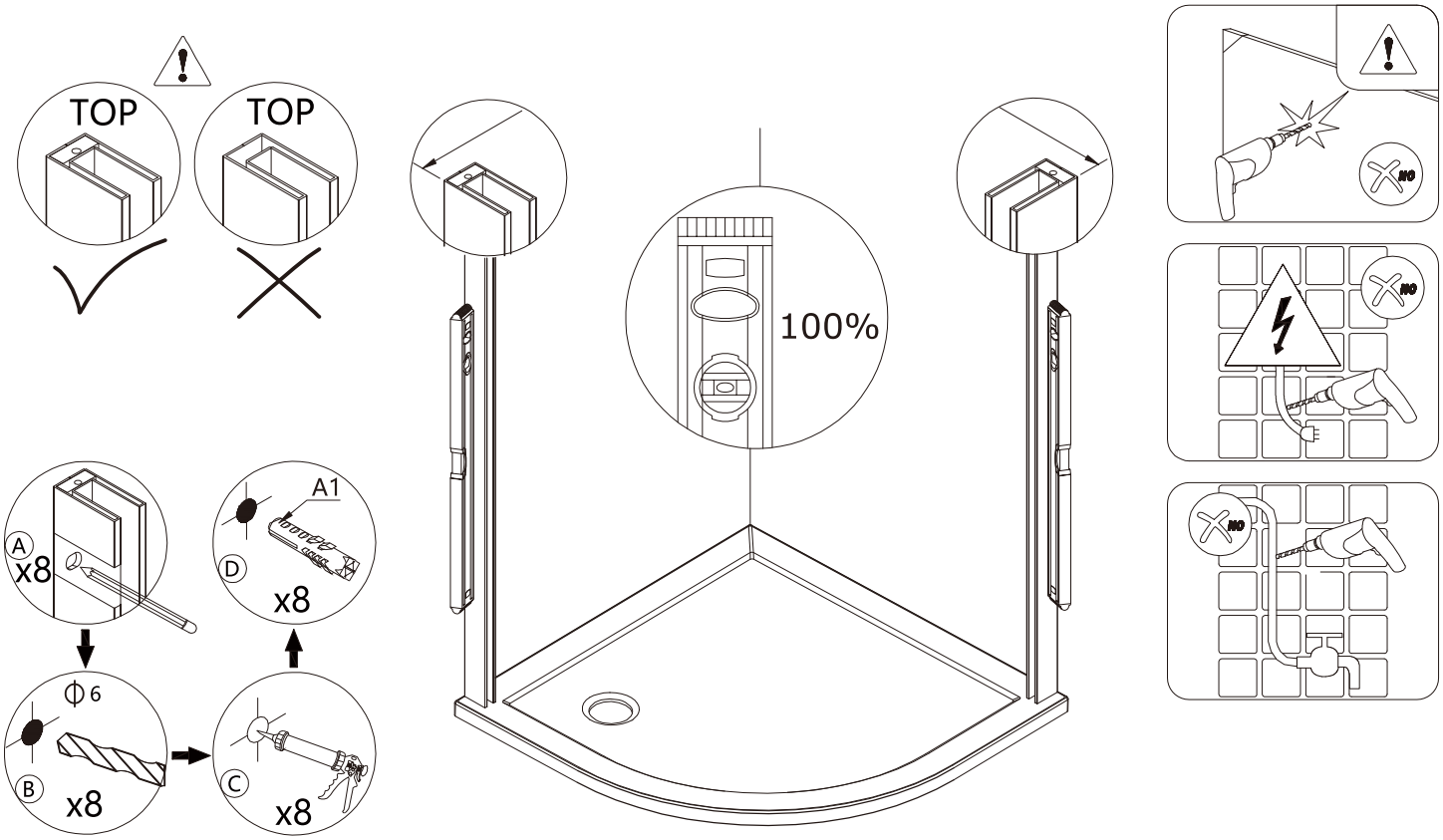

Step 3

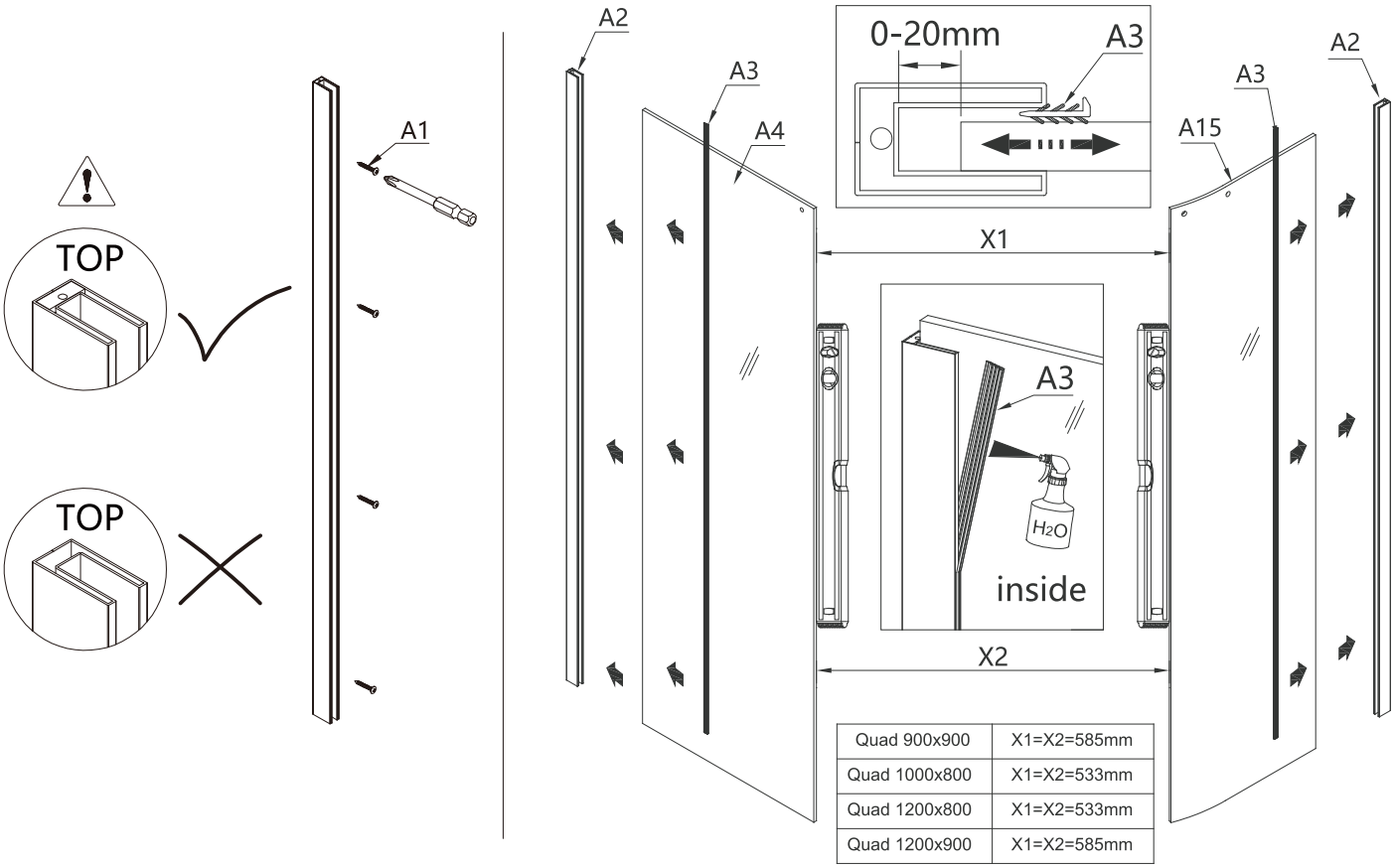

Quad 900x900	X1=X2=585mm
Quad 1000x800	X1=X2=533mm
Quad 1200x800	X1=X2=533mm
Quad 1200x900	X1=X2=585mm

crosswater

Step 4

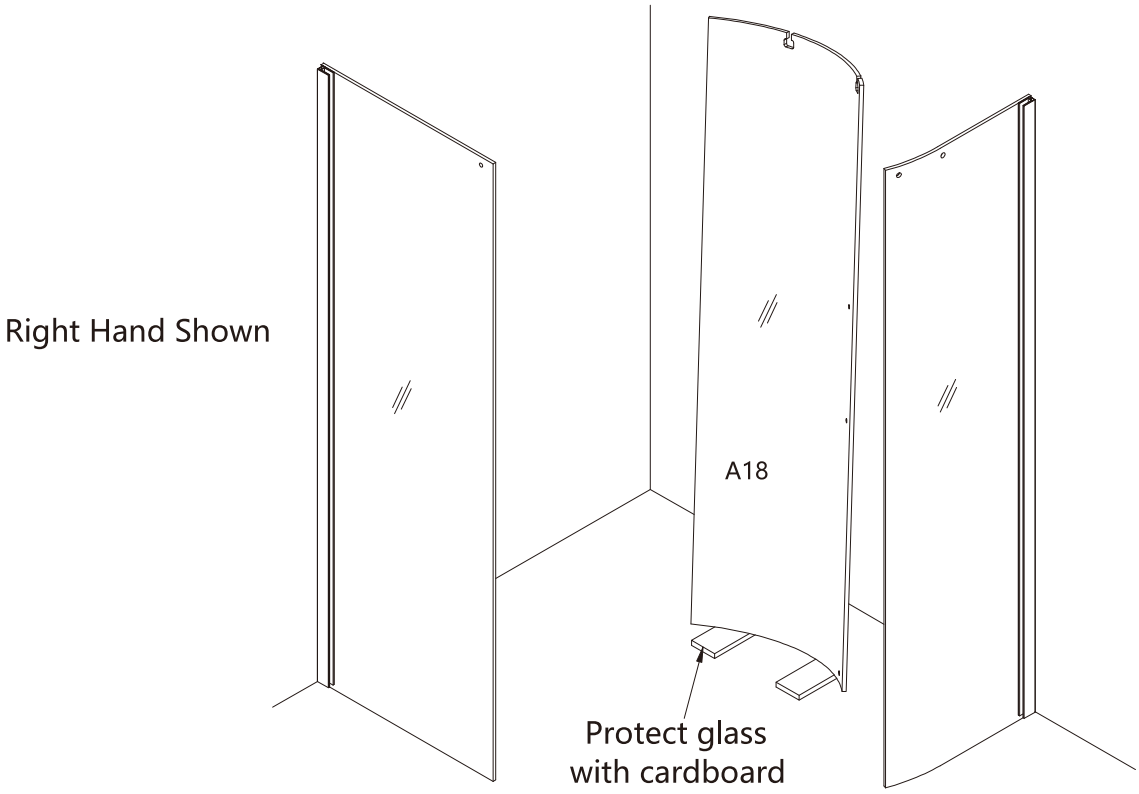

Step 5

Note: do not fully tighten screws until the top rail is level.

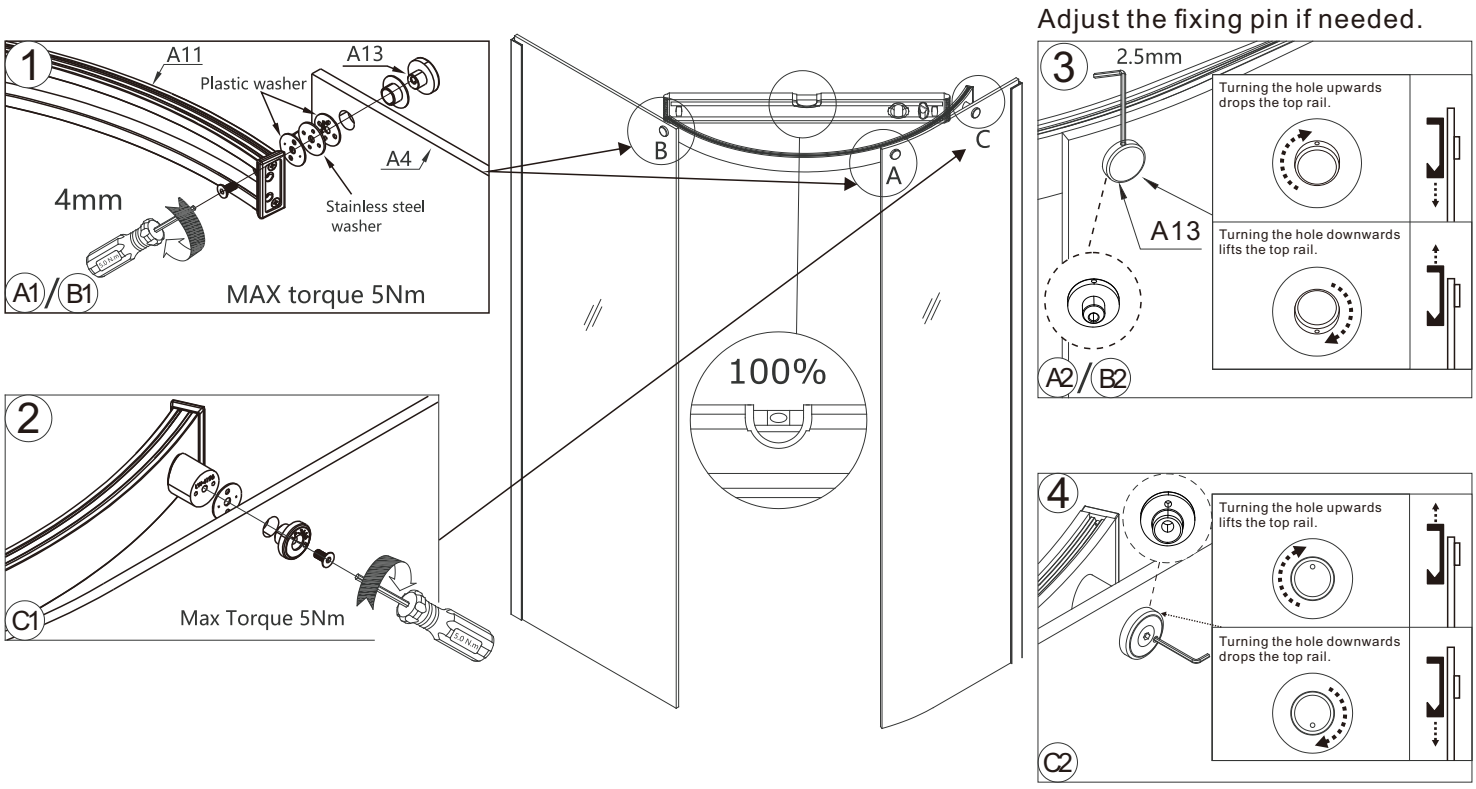

Step 6

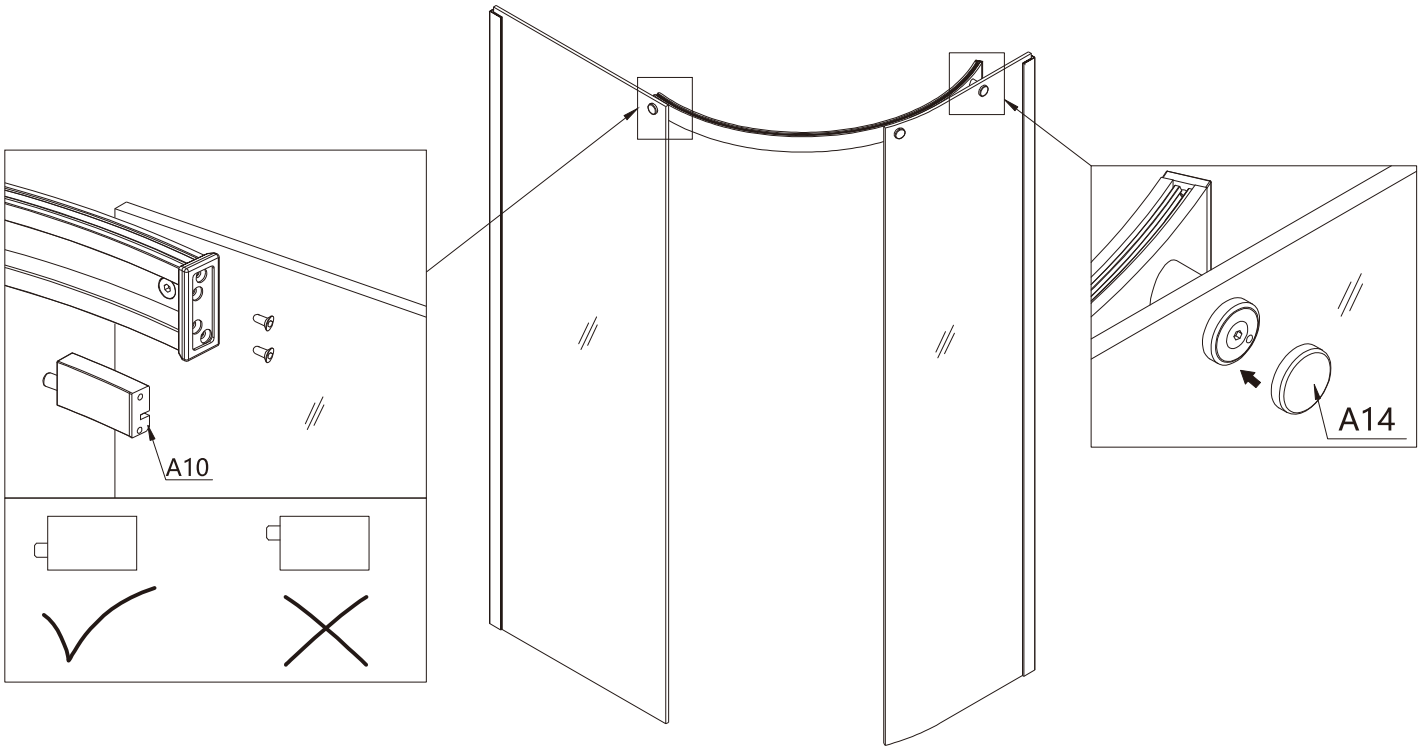
A10
A14

Step 7

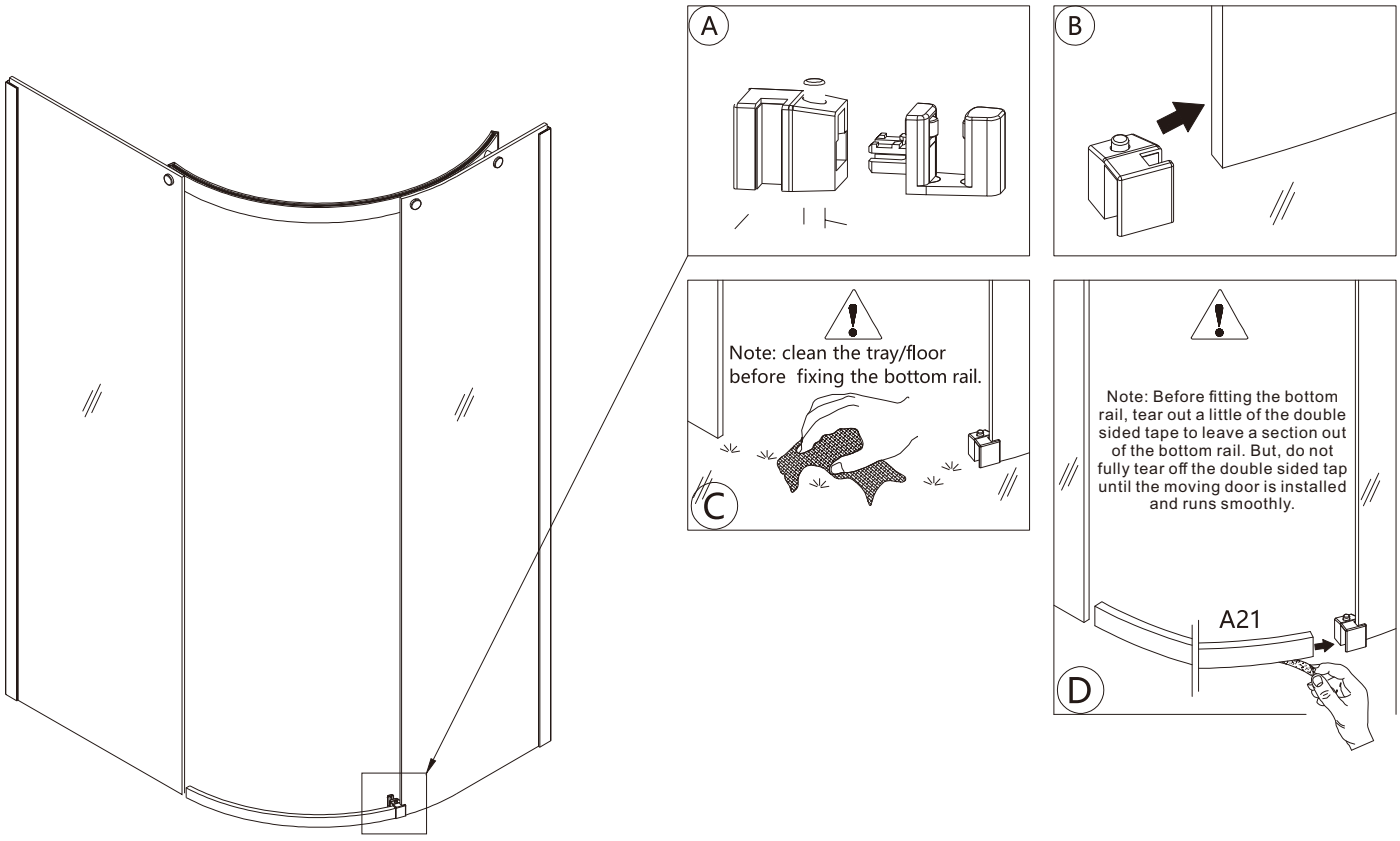
A
B
Note: clean the tray/floor before fixing the bottom rail.
C
Note: Before fitting the bottom rail, tear out a little of the double sided tape to leave a section out of the bottom rail. But, do not fully tear off the double sided tap until the moving door is installed and runs smoothly.
A21
D

Step 8

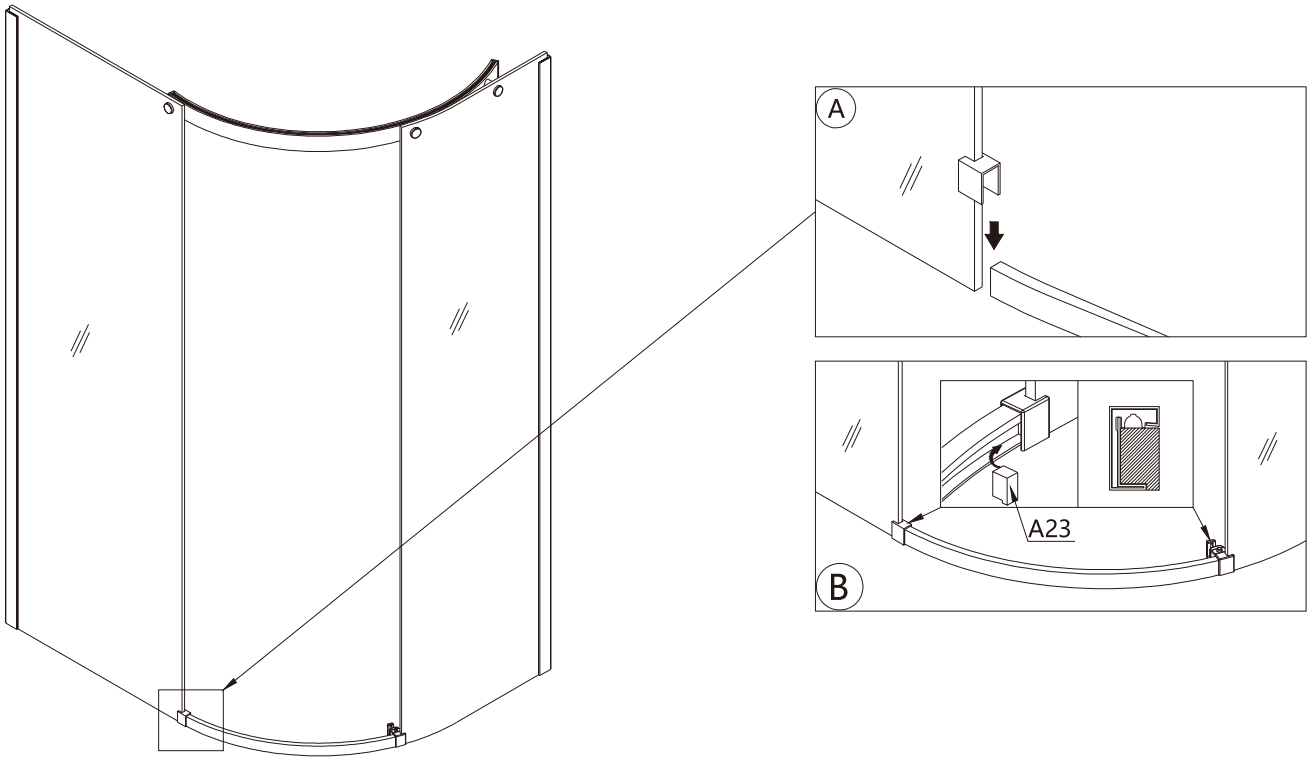

Step 9

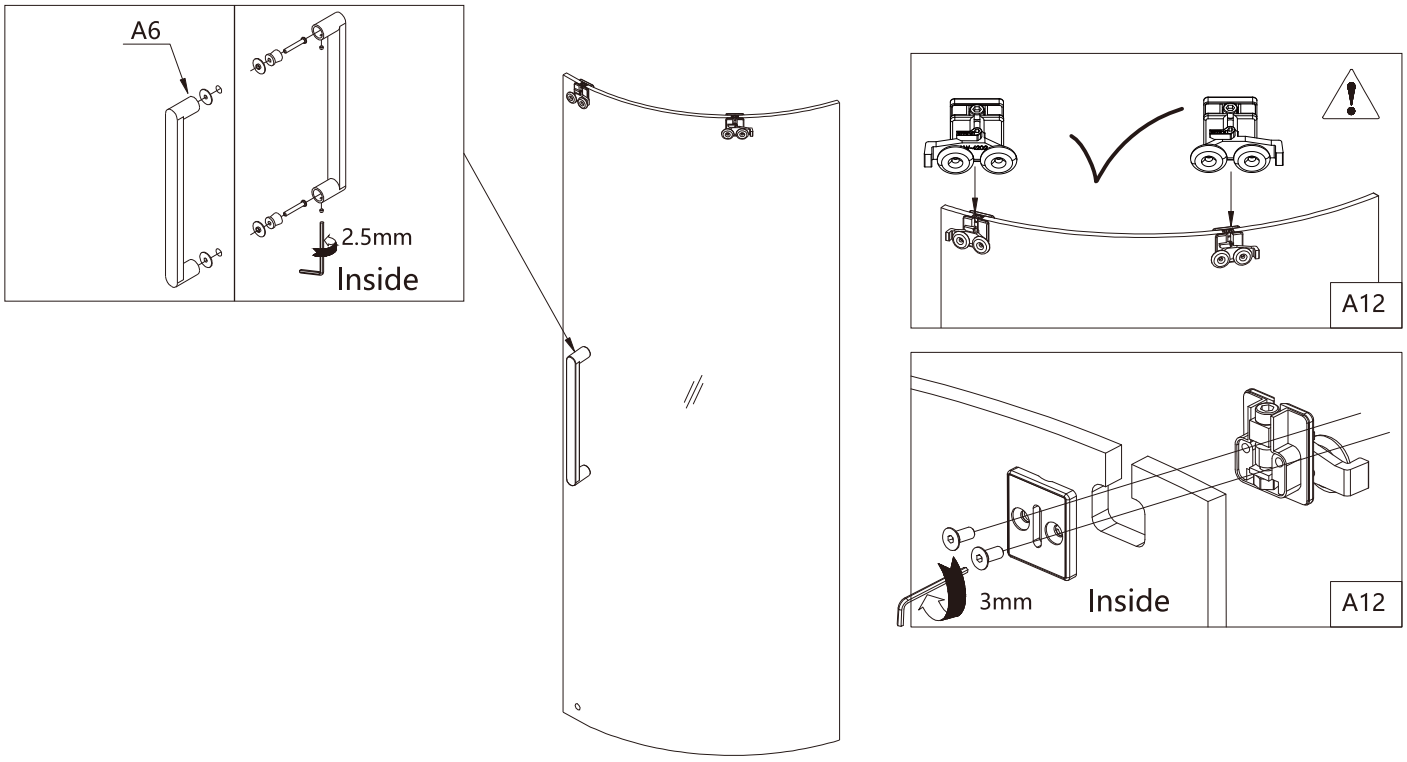

Step 10

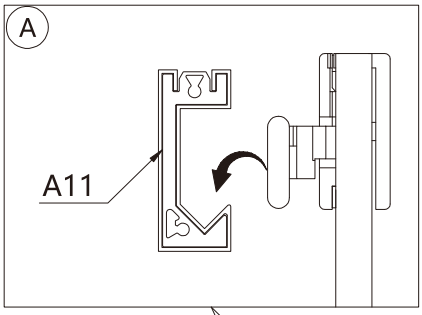

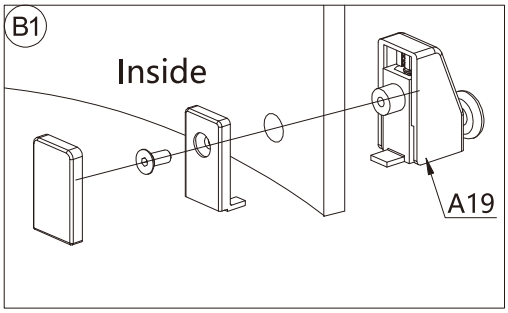

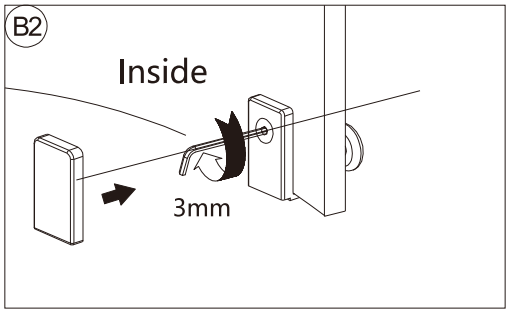

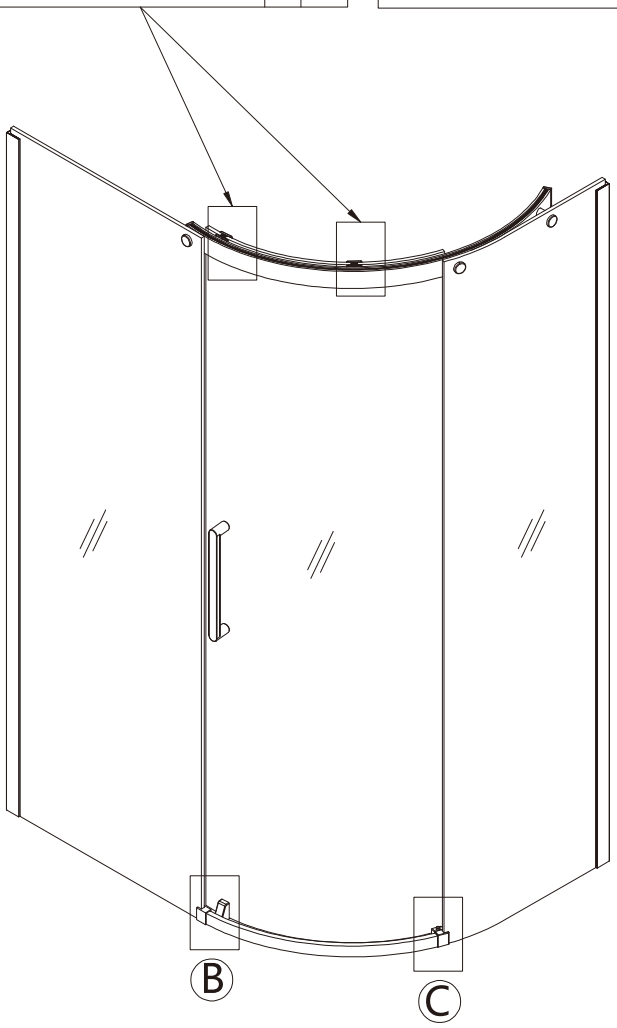

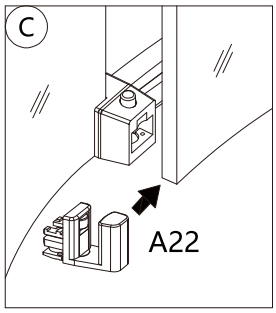

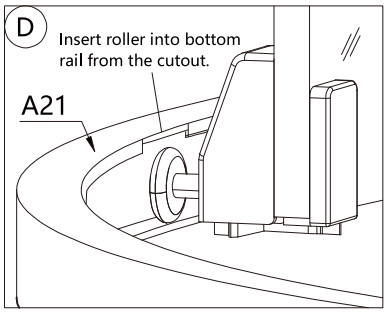

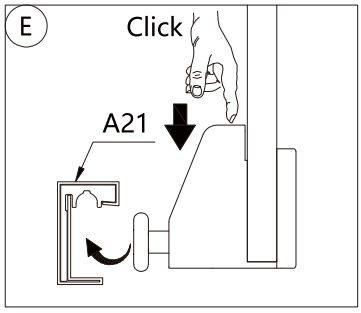

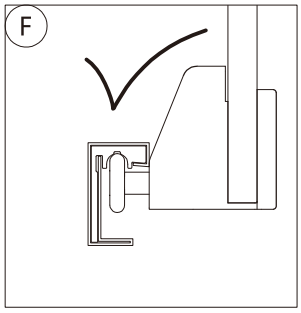

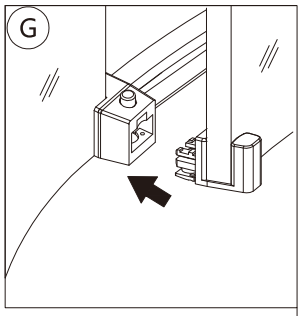

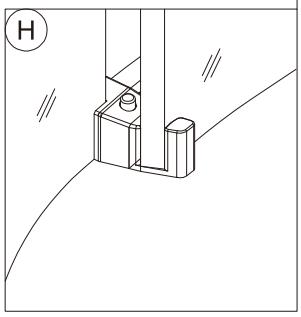

If door adjustment is needed, follow the below steps to take out the bottom roller from the bottom rail.

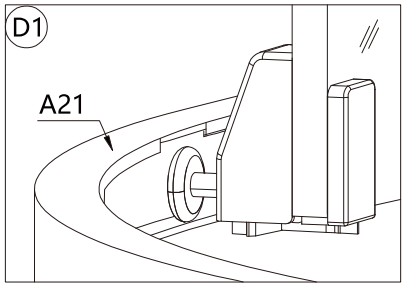

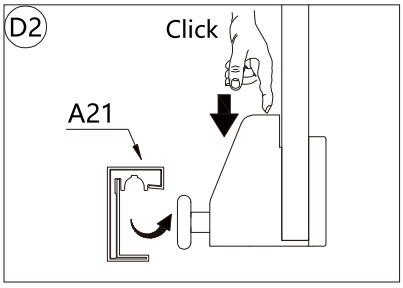

Step 11

If the door doesn't run smoothly, please follow the below steps to adjust.

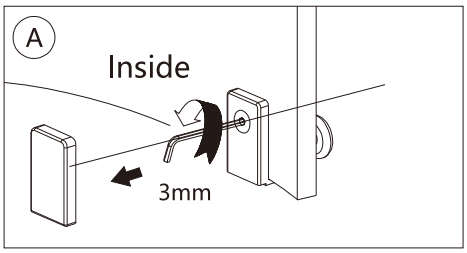

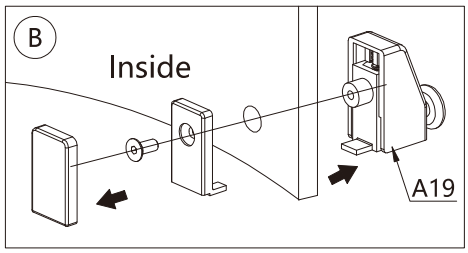

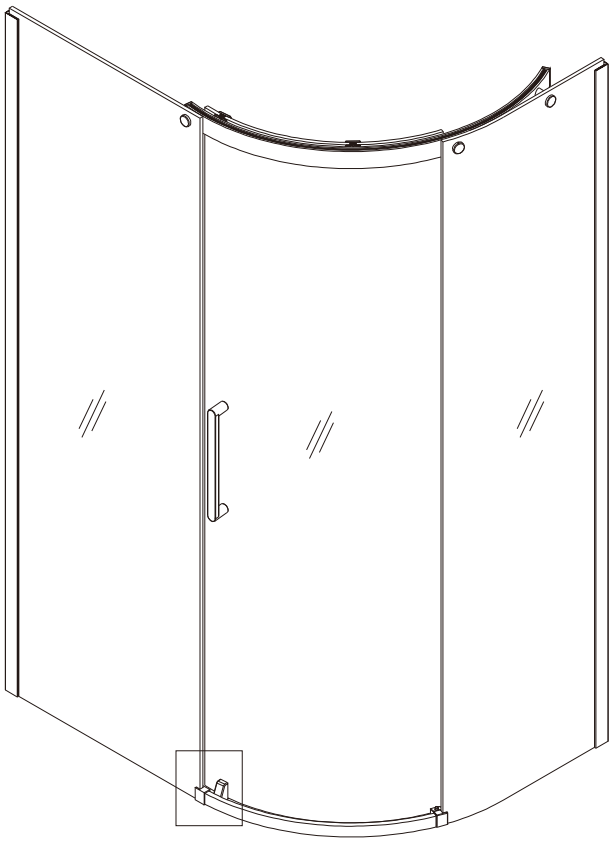

Option1:
Extend the pin slightly
(MAX 6mm)

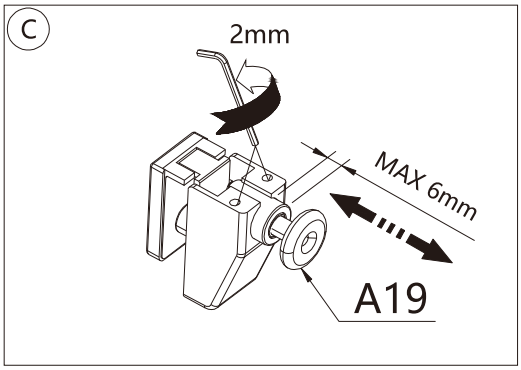

Option2:
Use the replacement roller with
spring(A19)

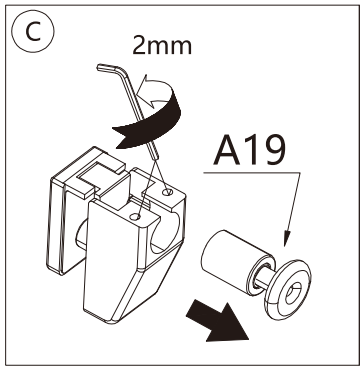

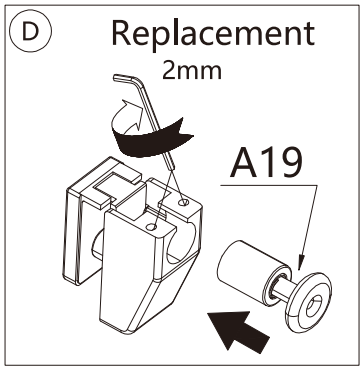

Step 12

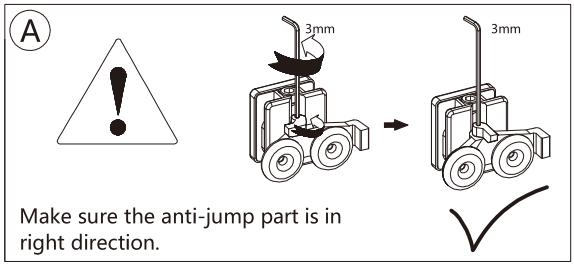

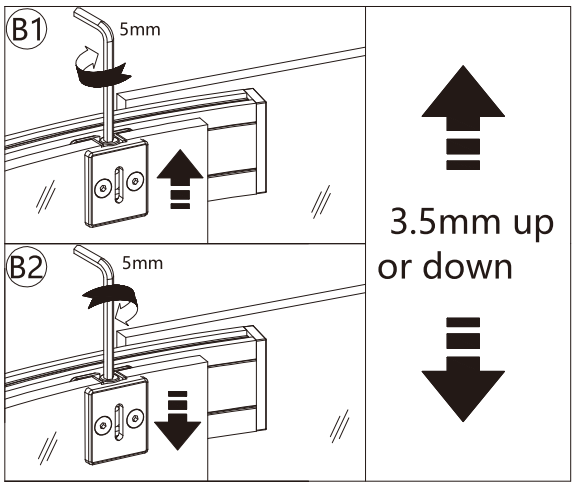

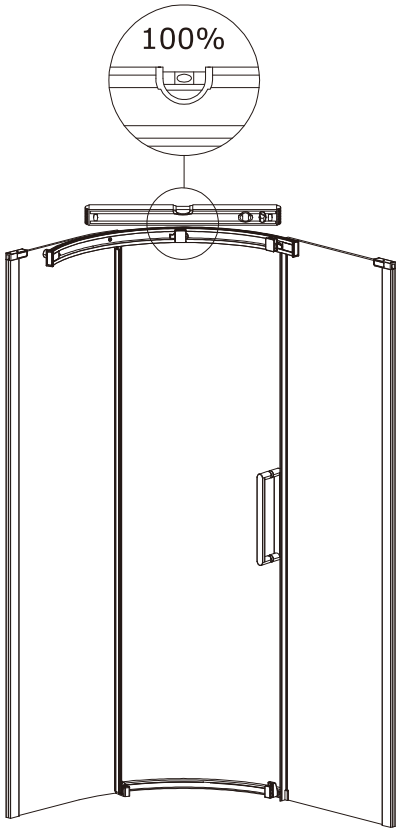

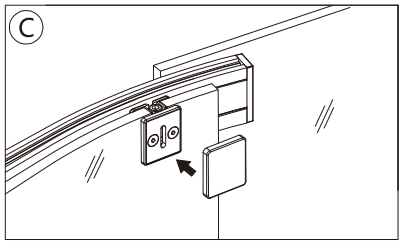

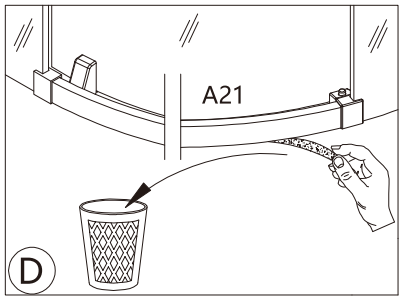

Step 13

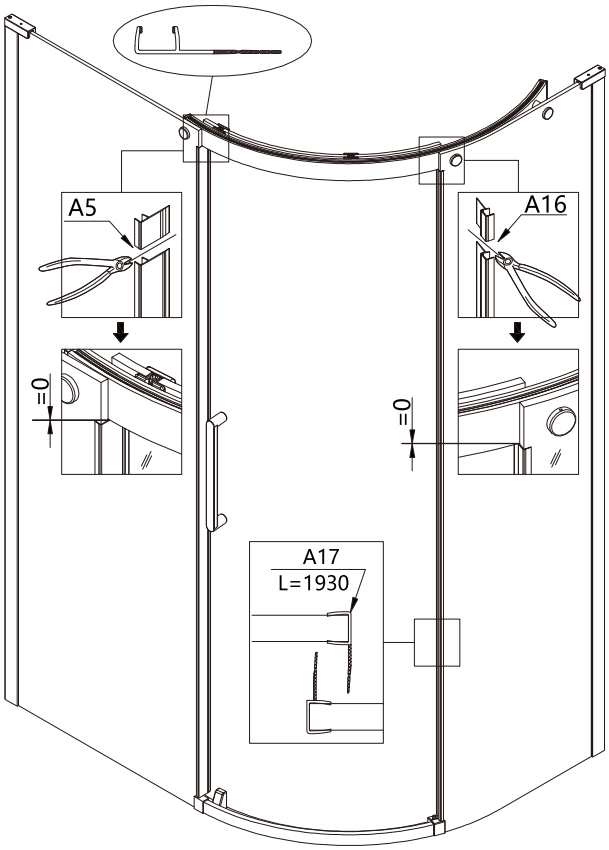

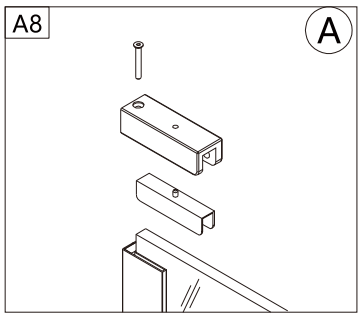

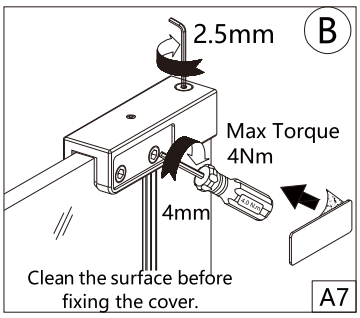

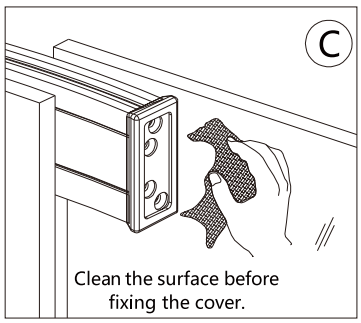

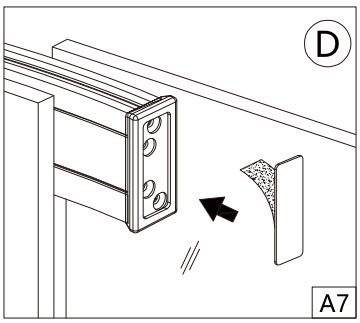

Step 14

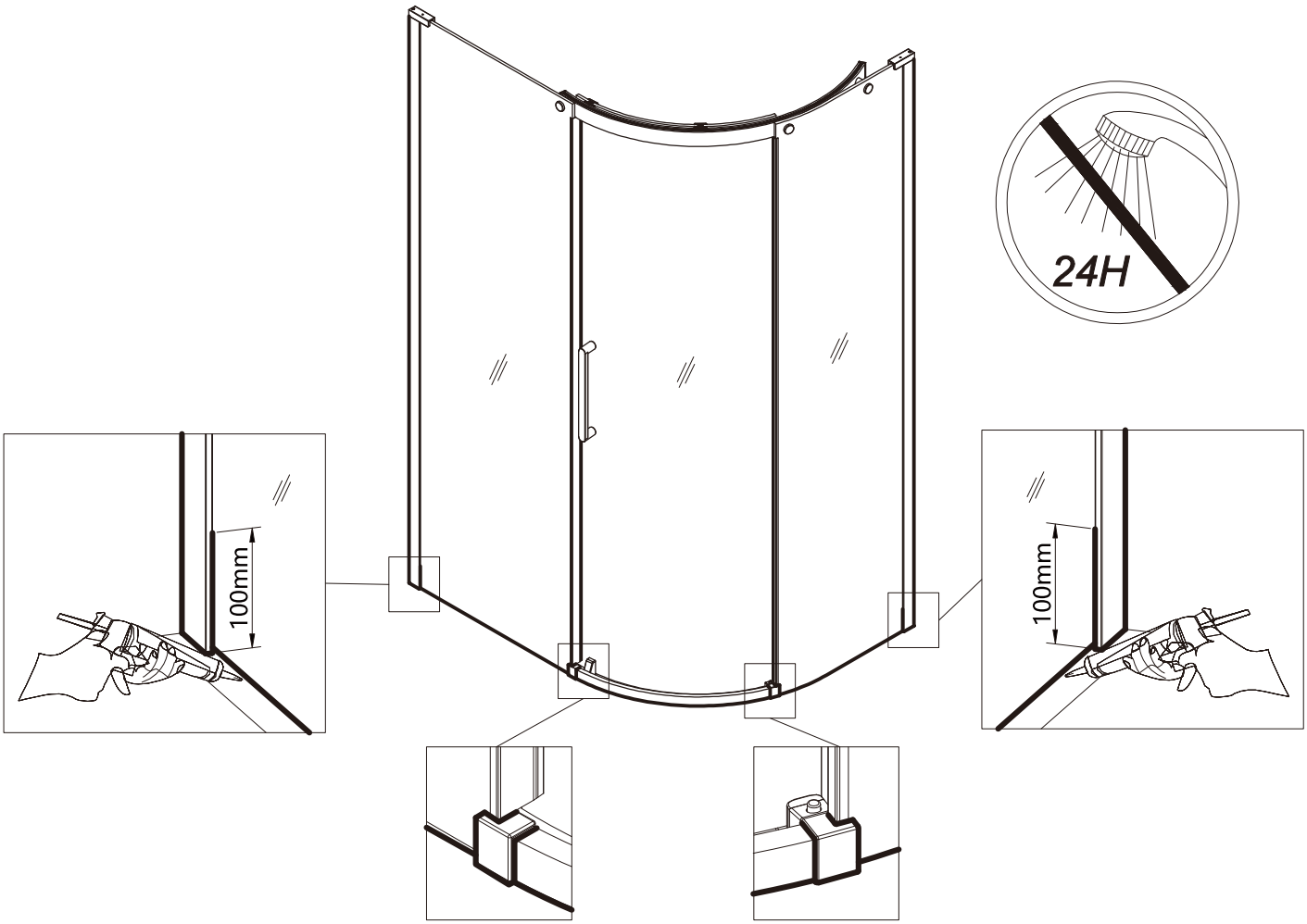

For any further information please contact Crosswater
Phone number, 0345 873 8840
Website, www.crosswater.co.uk
Email address, sales@crosswater.co.uk
The manufacturer reserves the right to make technical modifications without prior notice.

Optix 10 Quadrant

Manufactured to: BS EN 14428

IMPORTANT
BEFORE STARTING THE INSTALLATION ENSURE ALL THE DOOR SIZE MEASUREMENTS CORRESPOND WITH THE INSTALLATION AREA INCLUNDING THE FINISHED TILED/PANELLED WALLS.
RETURNS DUE TO INCORRECT SIZING WILL NOT BE ACCEPTED.

Requires a tray with minimum 60mm wide flat edge and 550mm radius.

OPTIX QUAD 900x900	94kgs
OPTIX QUAD 1000x800	92kgs
OPTIX QUAD 1200x800	103kgs
OPTIX QUAD 1200x900	109kgs

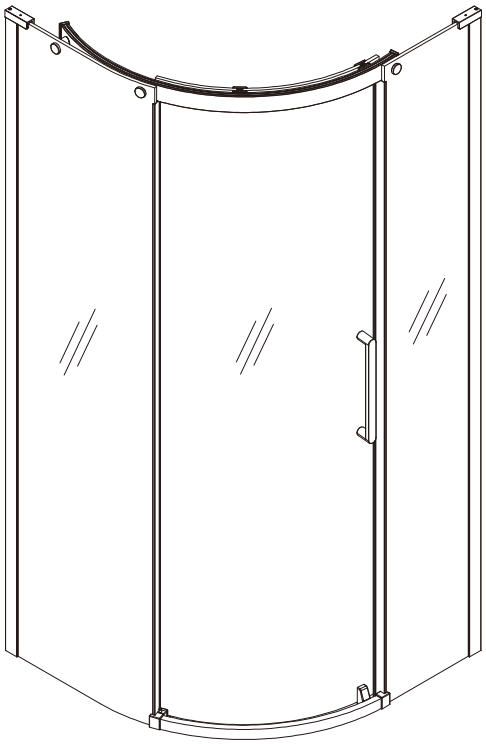

Door opens to the left

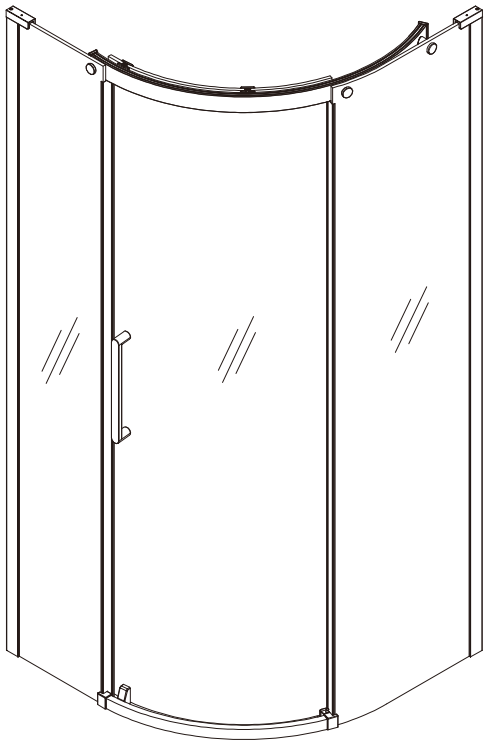

Door opens to the right

Optix 10 Quadrant

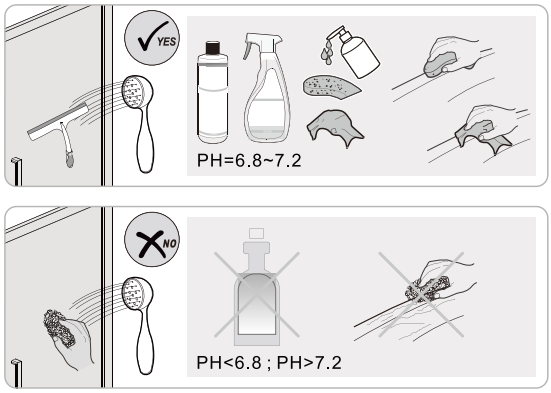

INSTALLATION INSTRUCTIONS

crosswater®

A

IMPORTANT - Please read before installation

Please read these instructions carefully before starting installation and keep in a safe place for future reference. Make a note of the model number.

Check the contents of the pack carefully before installation. Crosswater will not be held responsible for any de-fit / re-fit costs where faulty product has been fitted.
If any fault is found with materials or workmanship, it must be reported immediately to the manufacturer. Remedial action will be taken, based on information received, on condition that:
1. Full details are supplied to the manufacturer;
2. The shower door has not been modified or tampered with.
3. The supplied install components have been used,
4. The manufacturer is informed of any damage/shortages prior to installation.

We do not accept responsibility for any problems that may occur through incorrect installation.

The success of the installation and operation of any shower door is, of course, dependant on the squareness, alignment and construction of the walls to which fixing is to be carried out.

VERY IMPORTANT
You must complete all tiling and grouting, and the shower tray **MUST** be level and fully sealed to the tiles before installation. If you do not fit the shower door onto a tiled surface, or seal the tiles to the tray before installation, water may enter into the wall behind the wall profiles.

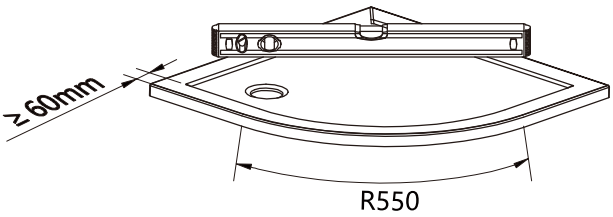

Optix quads require a shower tray with minimum 60mm flat/level outside edge. and 550mm radius.

The shower waste needs to be fitted in accordance with manufacturer's guidelines.

INSTALLATION - Advise and safety

The installation instructions are based on typical use and conditions.

All doors are designed to open outwards only.

Ensure that the product can be fixed to a solid masonry/brick wall or suitable timber stud work grade C16-C24 in the area behind the wall profile and wall brackets.

These hints have been prepared for your guidance, you must exercise due care at all times.

For Health and Safety 2 people must carry out the installation of this shower enclosure.

Handle glass with care. Although the glass supplied is toughened safety glass(**EN12150**), impacts can damage both the glass and the frame.

If fitting a tray we recommend a drainage test is carried out before the tray is tiled in position.

Warning!
Please check for any hidden pipes or cables before drilling holes in the wall.

When using power tools always follow the manufacturers user instructions.

Leave the silicone sealant to dry for 24 hours before using the shower door.

CARE AND CLEANING

Do not use solvents or abrasive material or chemicals to clean the shower door.

Only clean using soapy water and soft cloth, rinse thoroughly afterwards.

INSTALLATION - Left and Right hand

The door has left and right hand versions.
This instruction shows the RIGHT HAND installation. Reverse for LEFT HAND opening.

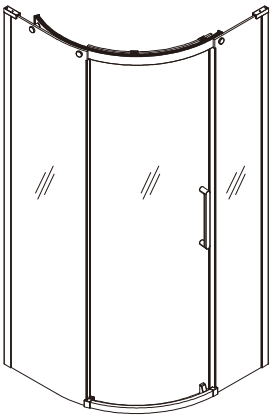

Door opens to left

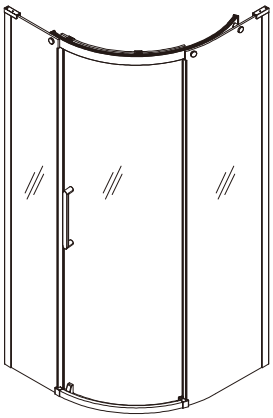

Door opens to right

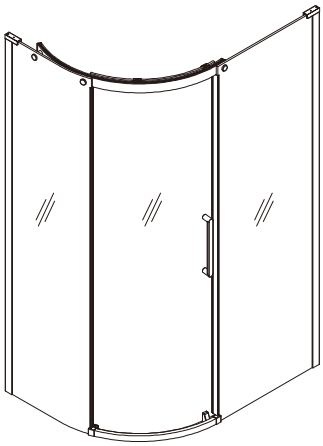

Door opens to left

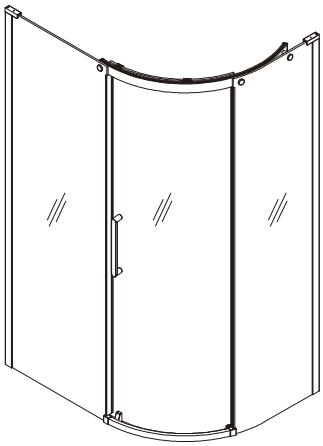

Door opens to right

crosswater

Optix 10 Quadrant

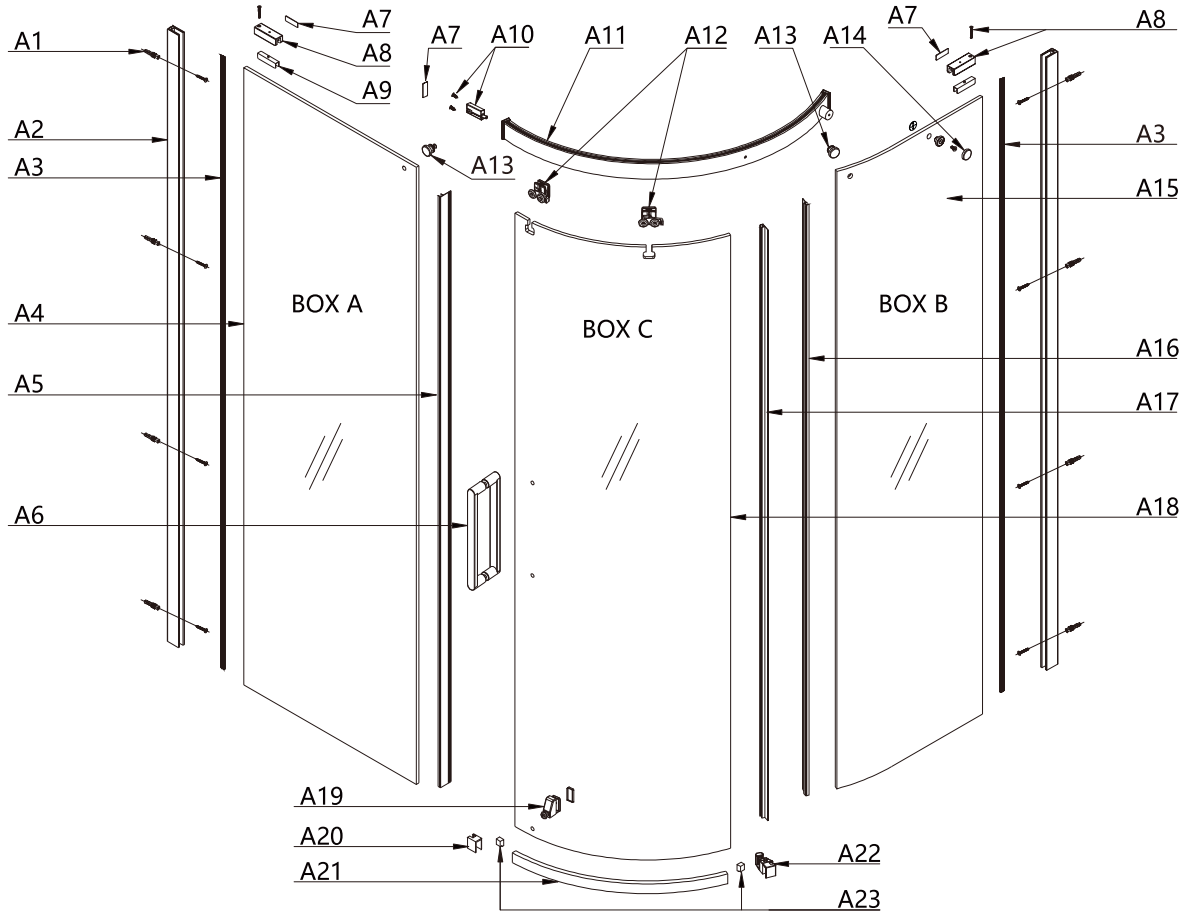

A 1	Wall plug and 4x50mm screw	8+8
A 2	Wall profile	x2
A 3	Wall profile seal	x2
A 4	Flat fixed Glass	L R x1
A 5	Flat Glass Seal	x1
A 6	Handle	x1
A 7	Bracing Bar Screw Cover	x3
A 8	Bracing bar	Lx1 Rx1
A 9	Bracing bar gasket	x2
A 10	Top rail soft damper	L R x1
A 11	Top Profile	L R x1
A 12	Top roller	x2
A 13	Top Rail Fixing Pin	x2
A 14	Top Rail Fixing Pin Cover	x1
A 15	Curved Fixed Panel	L R x1
A 16	Fixed Curved Panel Vertical Seal	x1
A 17	Moving Curved Glass Vertical Seal L=1930mm	x1
A 18	Curved Moving Panel	L R x1
A 19	Bottom roller	x1 Replacement roller with spring x1* Only required if the door is out of alignment see page 10
A 20	Bottom profile cap	L R x1
A 21	Bottom Profile	L R x1
A 22	Bottom guide	L R x1
A 23	Bottom Profile Spacer	x2
A 24	Allen key	2mm x1 2.5mm x1 3mm x1 4mm x1 5mm x1

crosswater

Installation tools required - not included

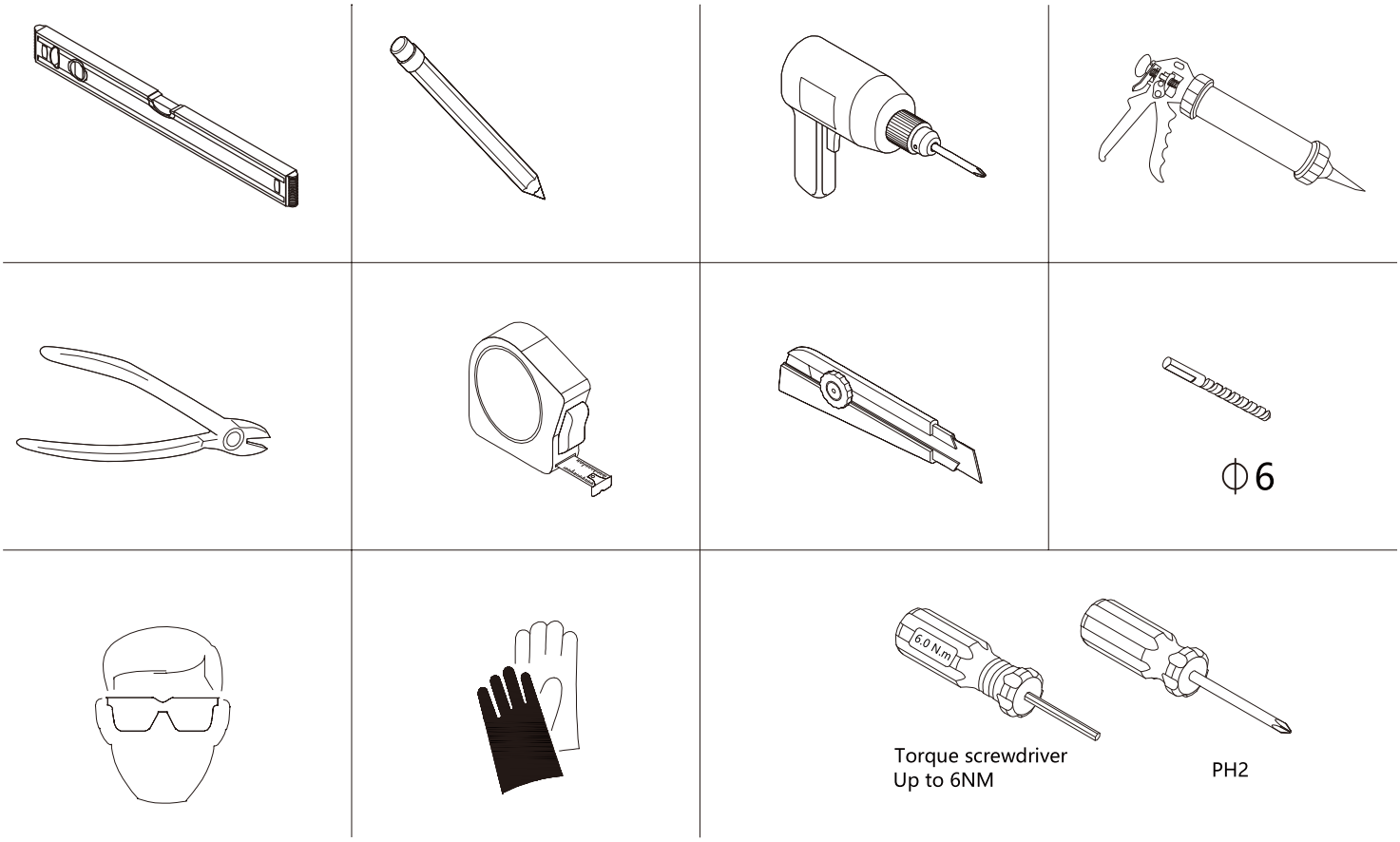

Step 1

LH	A	B
900x900	860-880mm	860-880mm
1000x800	960-980mm	760-780mm
1200x800	1160-1180mm	760-780mm
1200x900	1160-1180mm	860-880mm

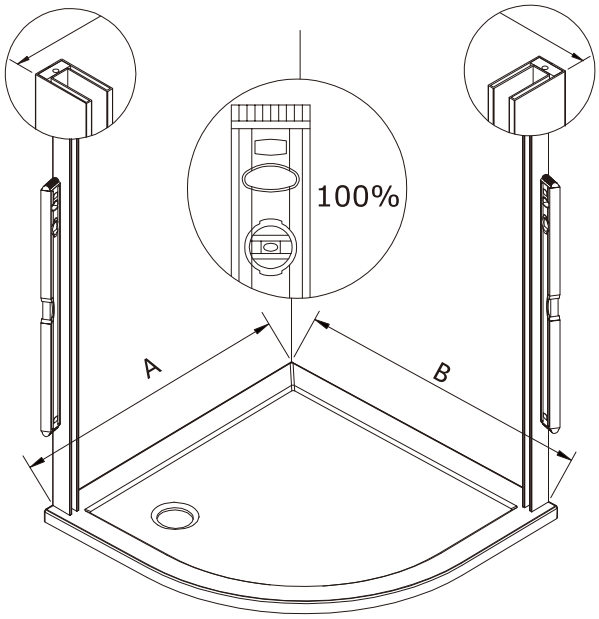

RH	A	B
900x900	860-880mm	860-880mm
1000x800	760-780mm	960-980mm
1200x800	760-780mm	1160-1180mm
1200x900	860-880mm	1160-1180mm

Step 2

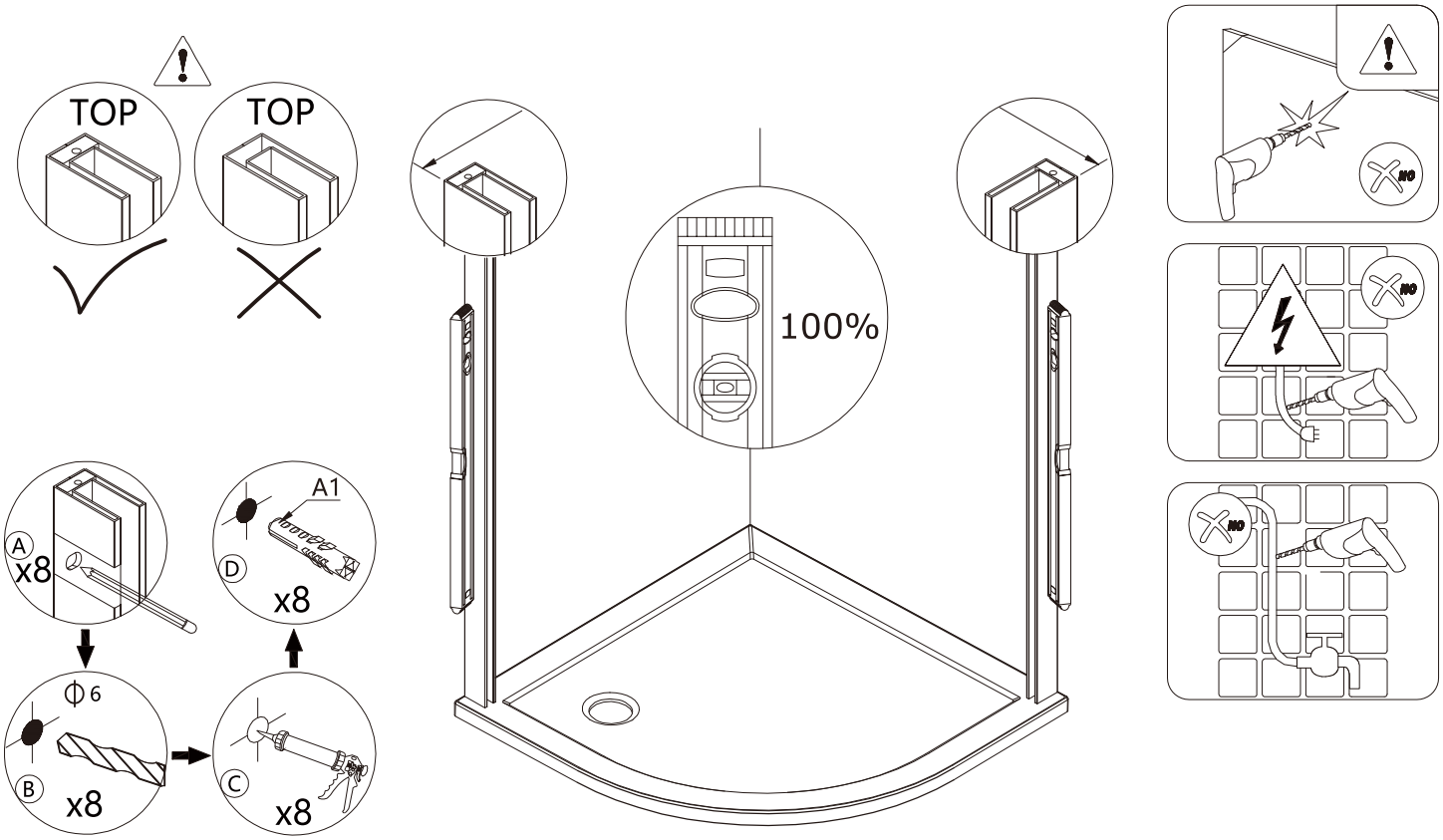

Step 3

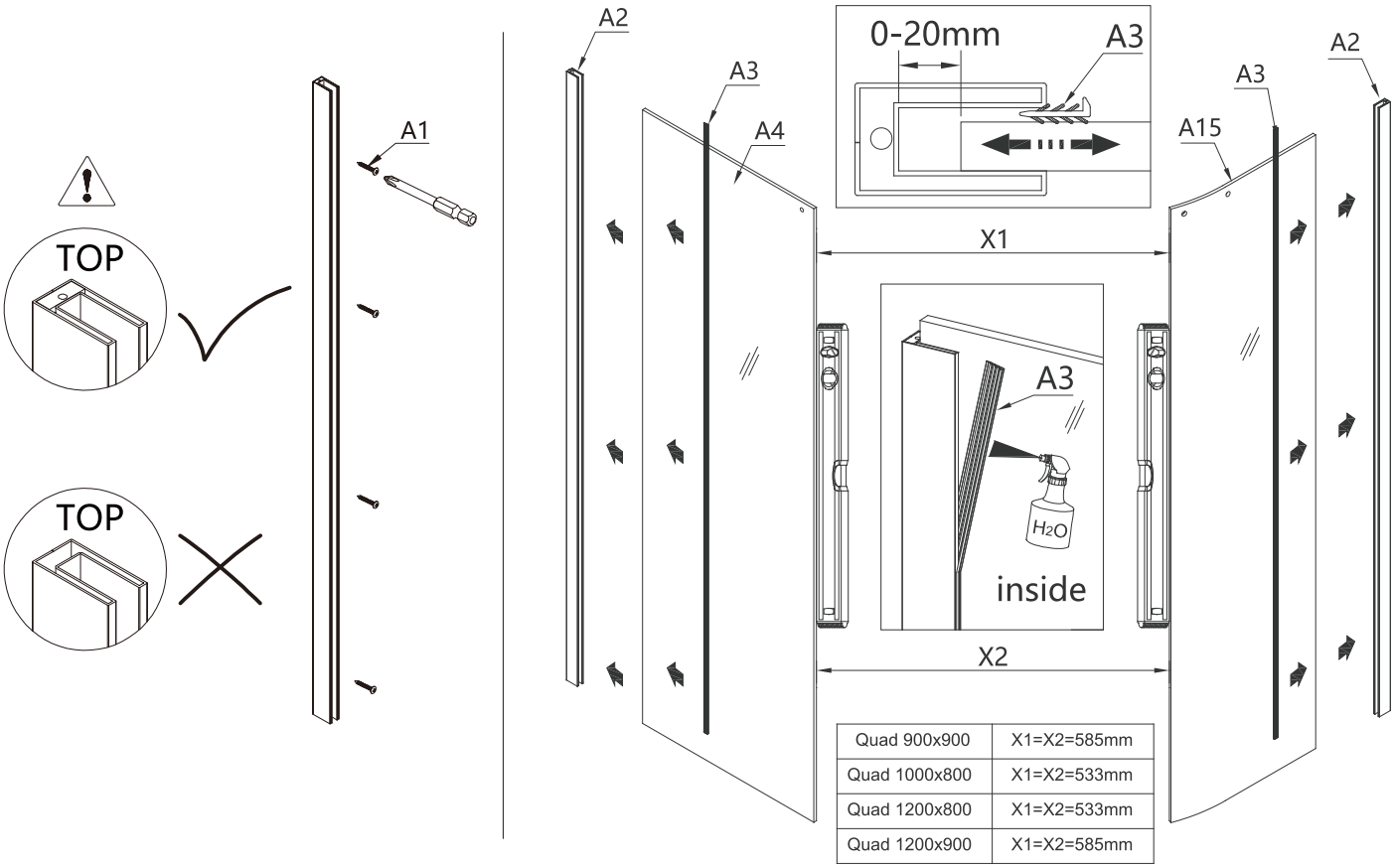

Quad 900x900	X1=X2=585mm
Quad 1000x800	X1=X2=533mm
Quad 1200x800	X1=X2=533mm
Quad 1200x900	X1=X2=585mm

crosswater

Step 4

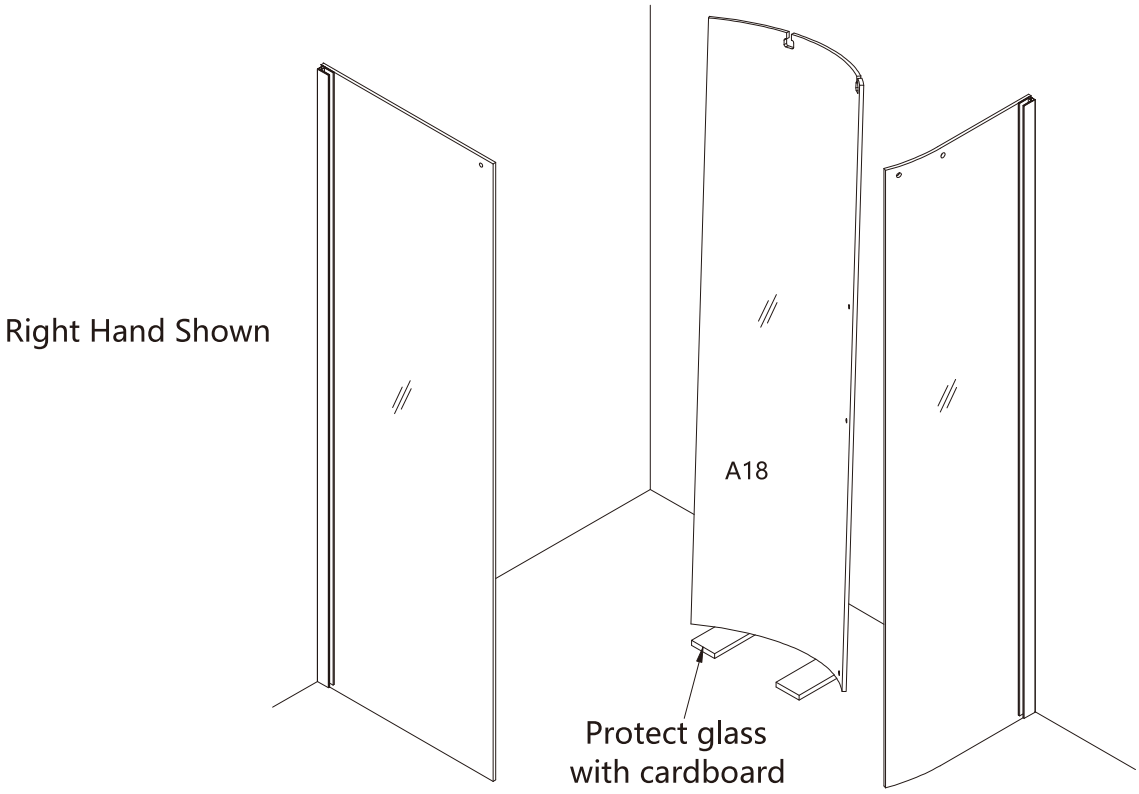

Step 5

Note: do not fully tighten screws until the top rail is level.

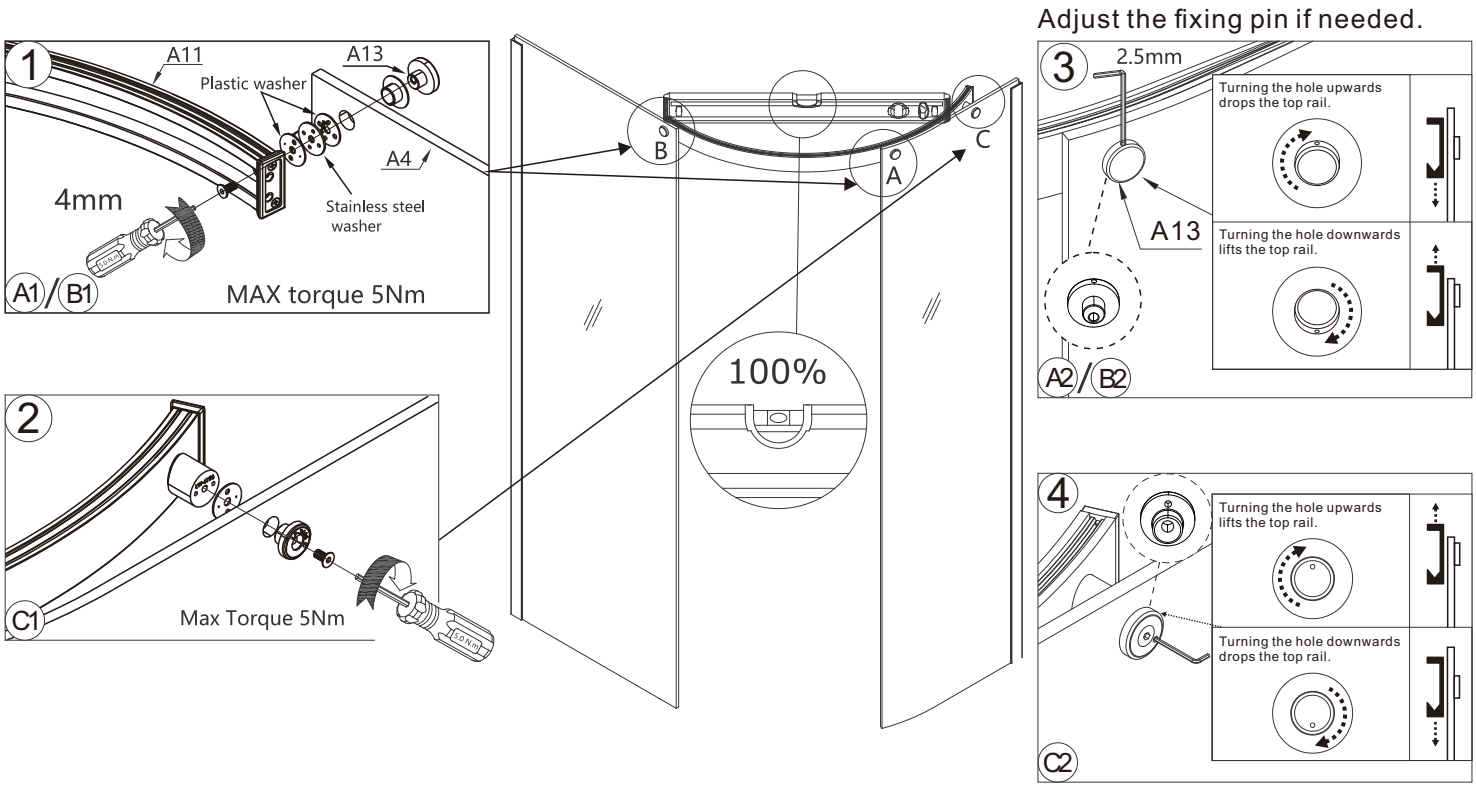

Step 6

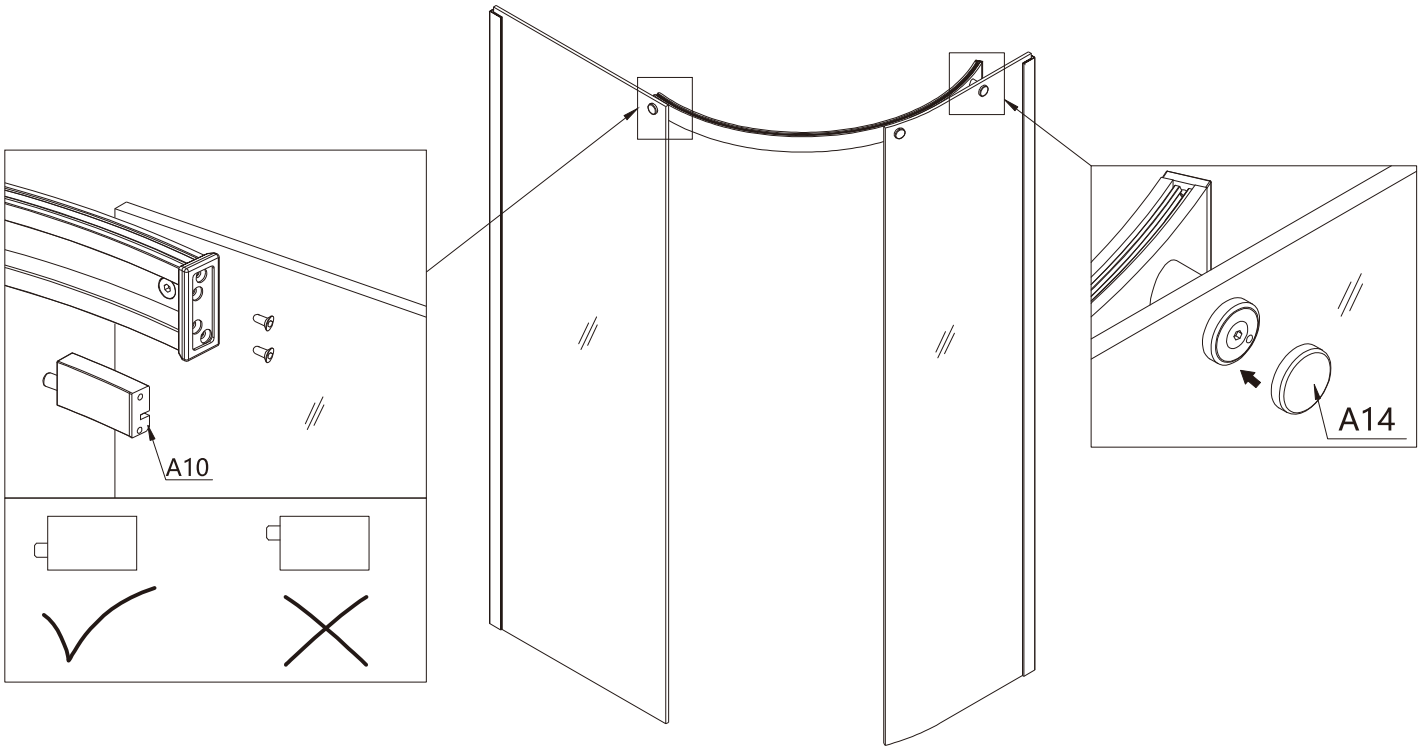
A10
A14

Step 7

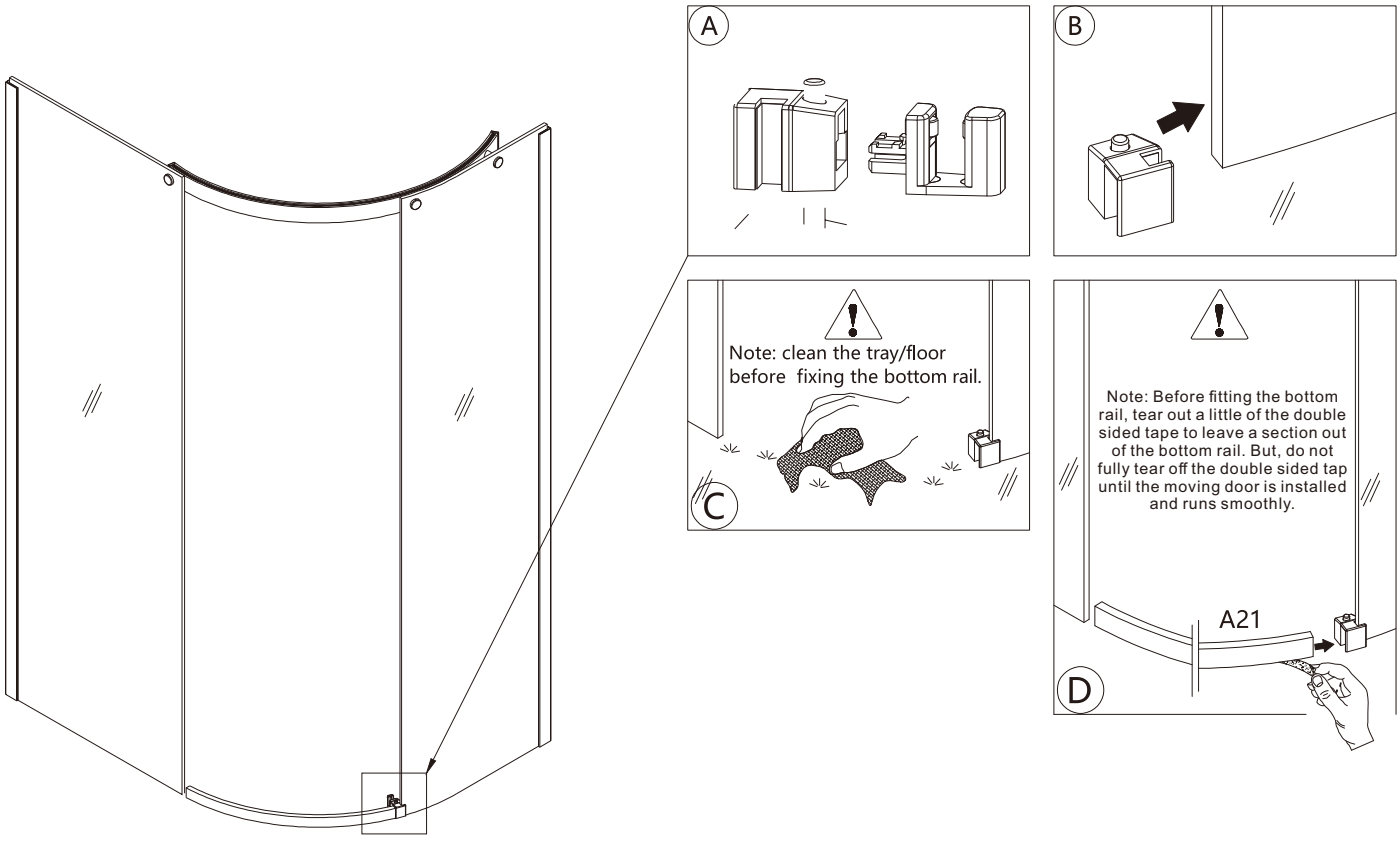
A
B
Note: clean the tray/floor before fixing the bottom rail.
C
Note: Before fitting the bottom rail, tear out a little of the double sided tape to leave a section out of the bottom rail. But, do not fully tear off the double sided tap until the moving door is installed and runs smoothly.
A21
D

Step 8

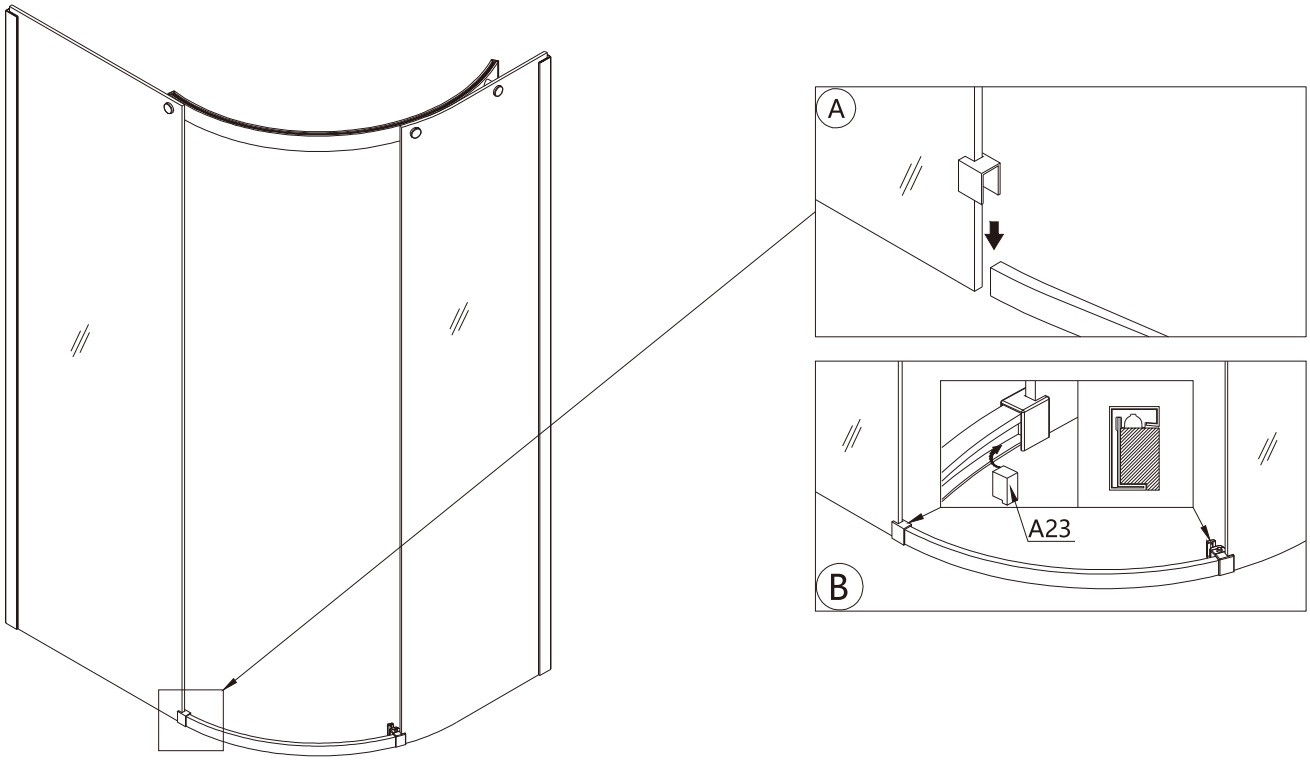

Step 9

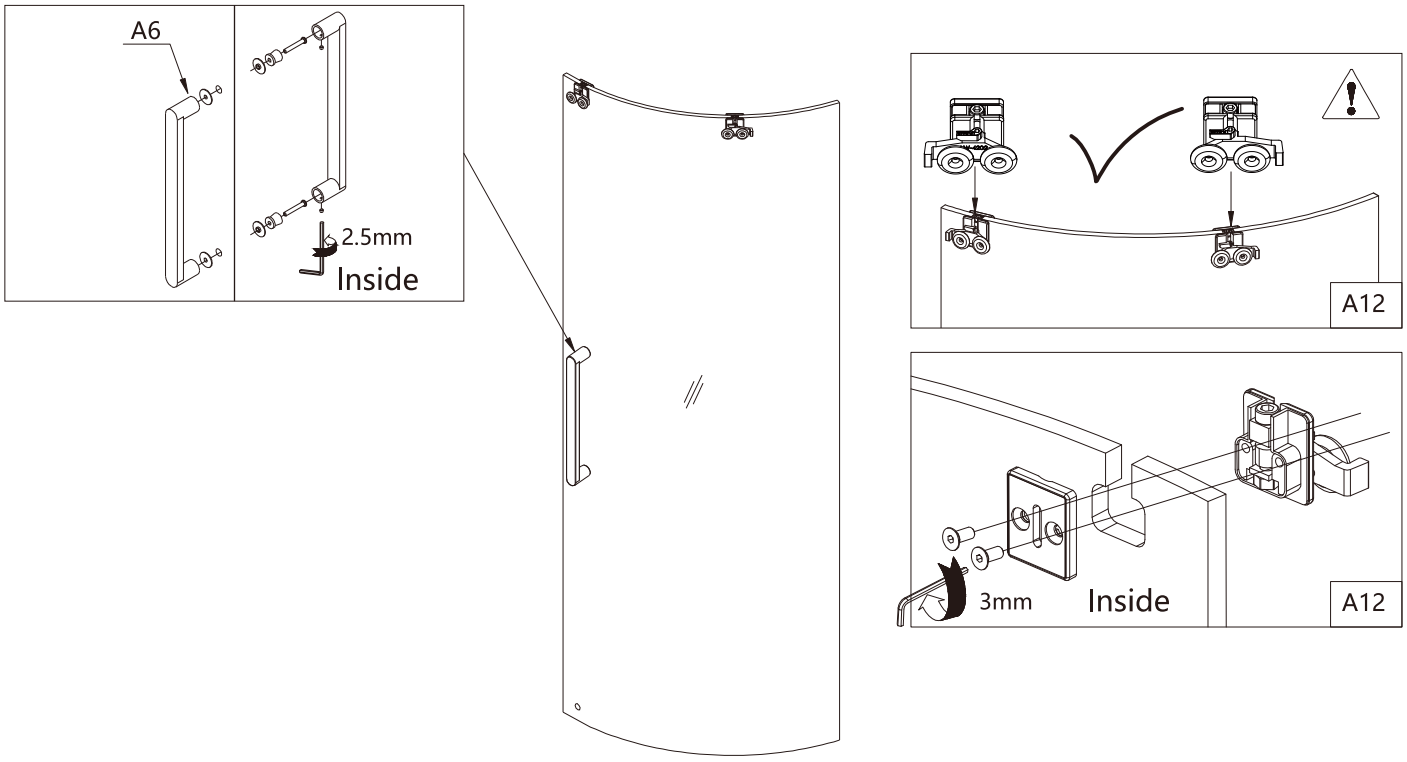

Step 10

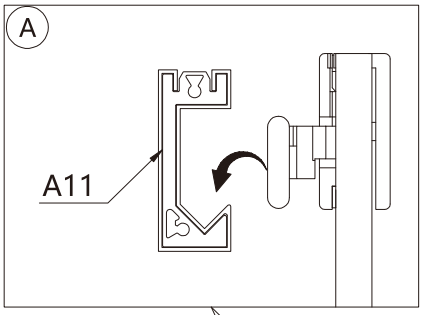

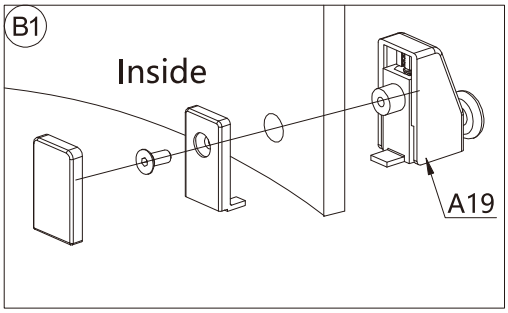

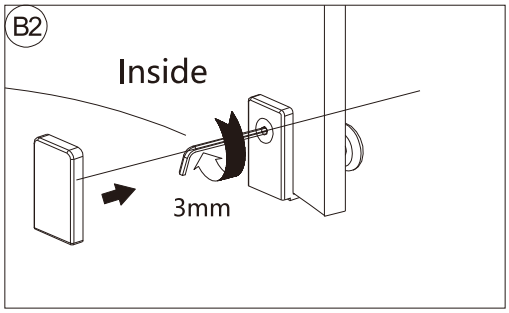

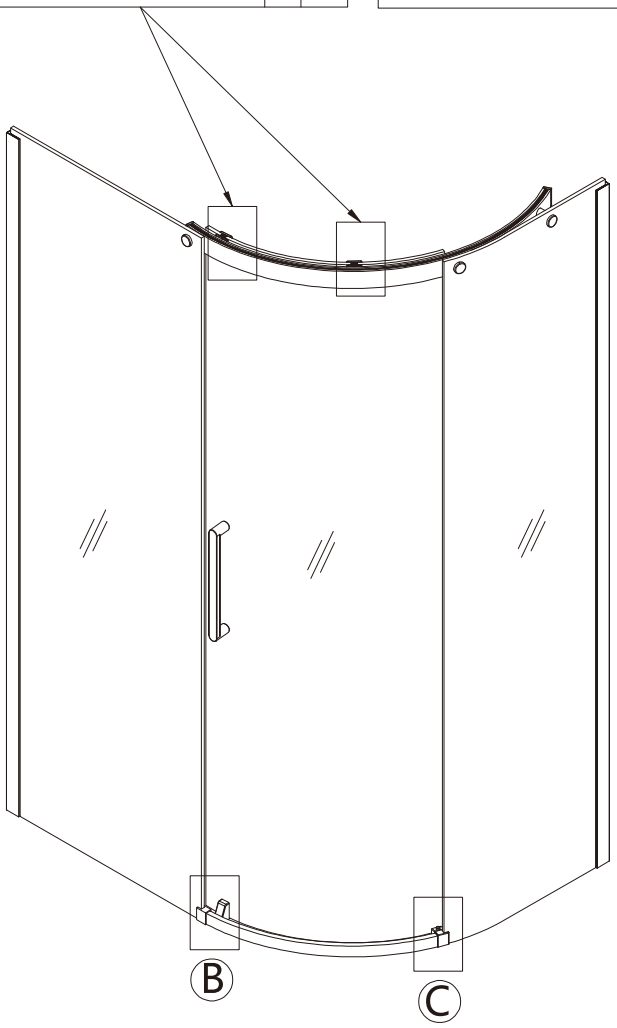

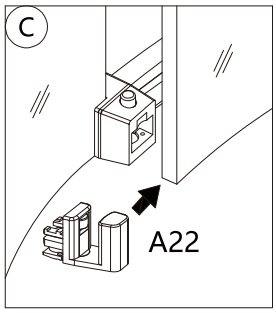

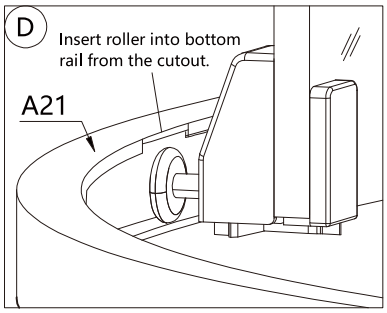

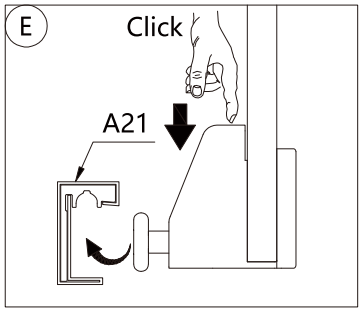

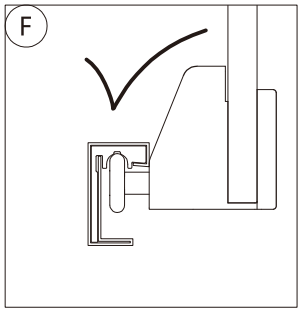

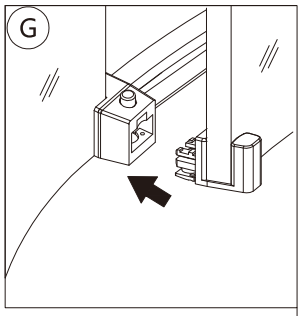

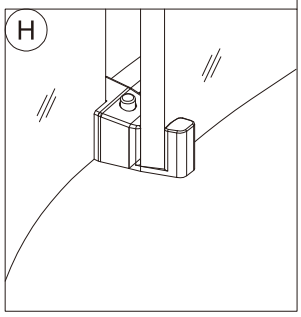

If door adjustment is needed, follow the below steps to take out the bottom roller from the bottom rail.

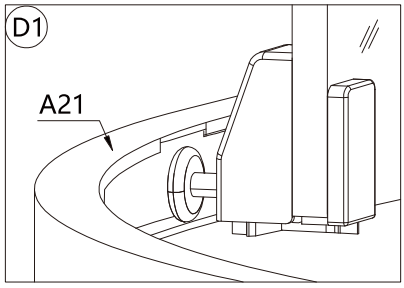

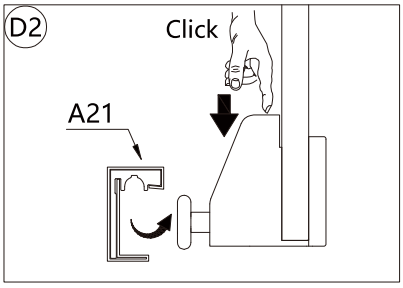

Step 11

If the door doesn't run smoothly, please follow the below steps to adjust.

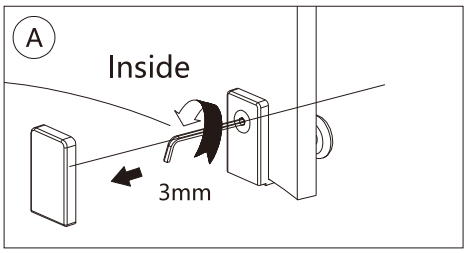

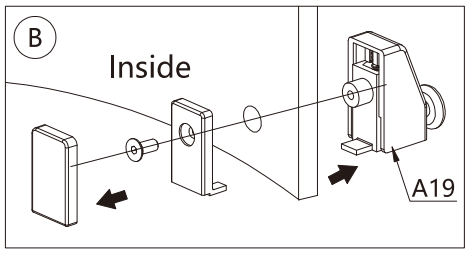

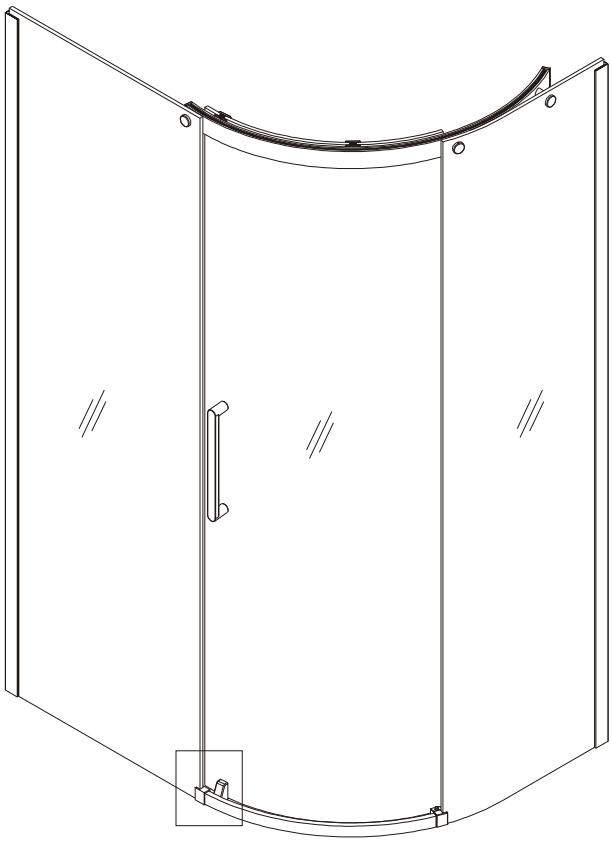

Option1:
Extend the pin slightly
(MAX 6mm)

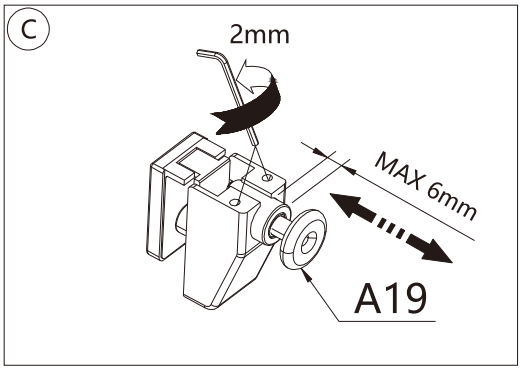

Option2:
Use the replacement roller with
spring(A19)

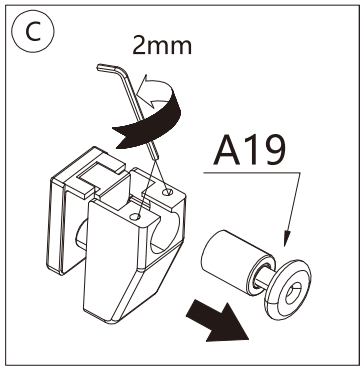

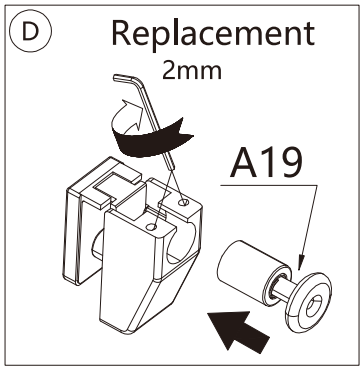

Step 12

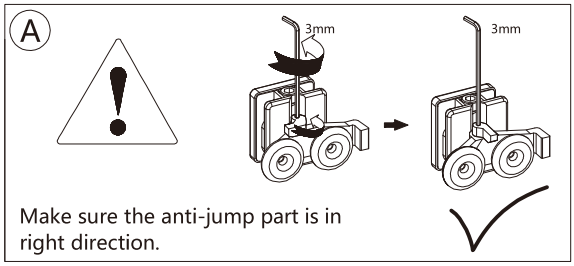

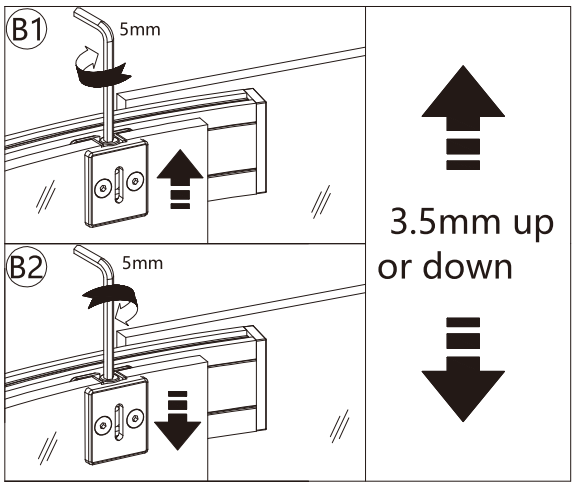

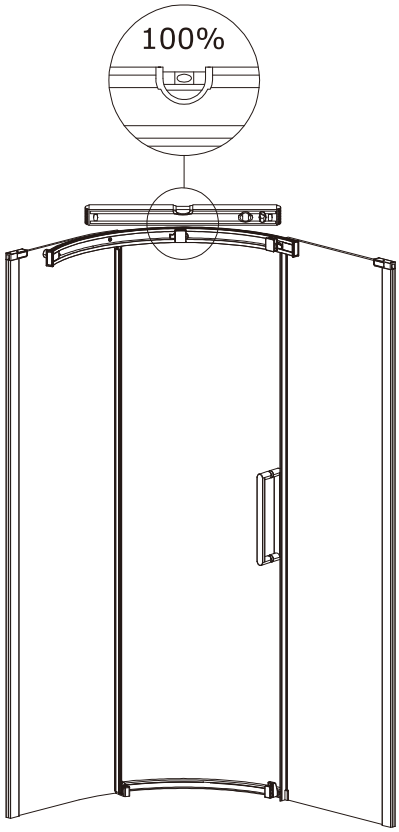

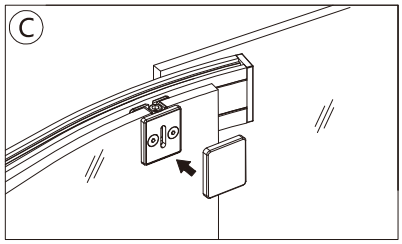

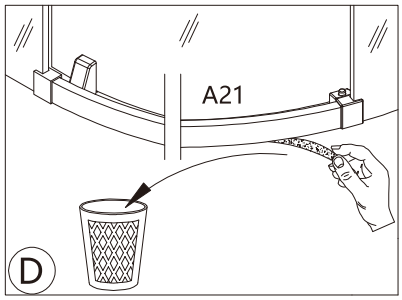

Step 13

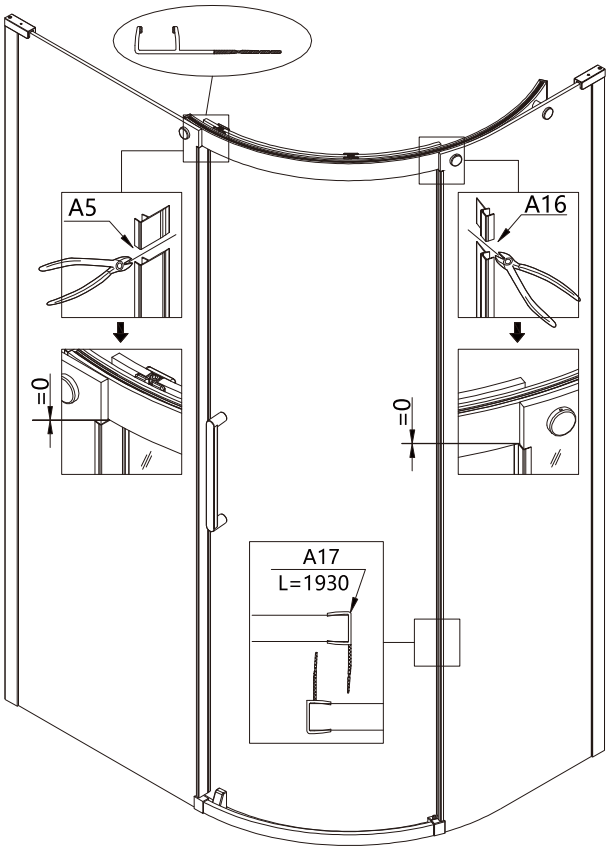

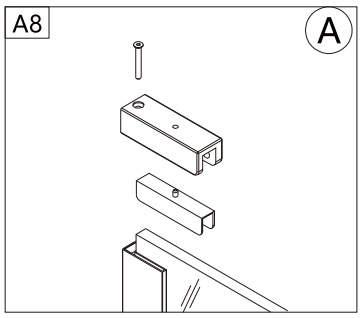

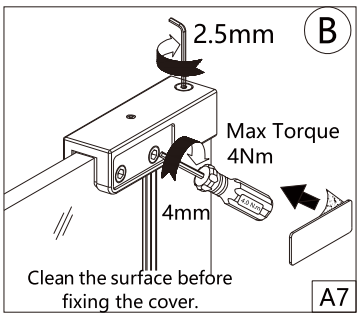

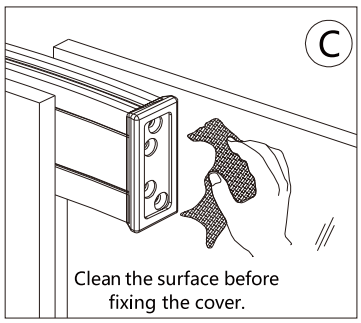

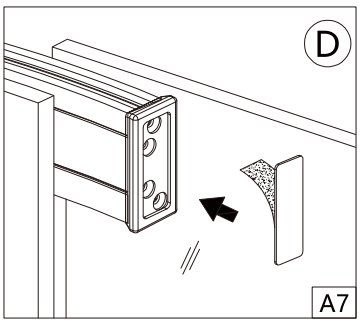

Step 14

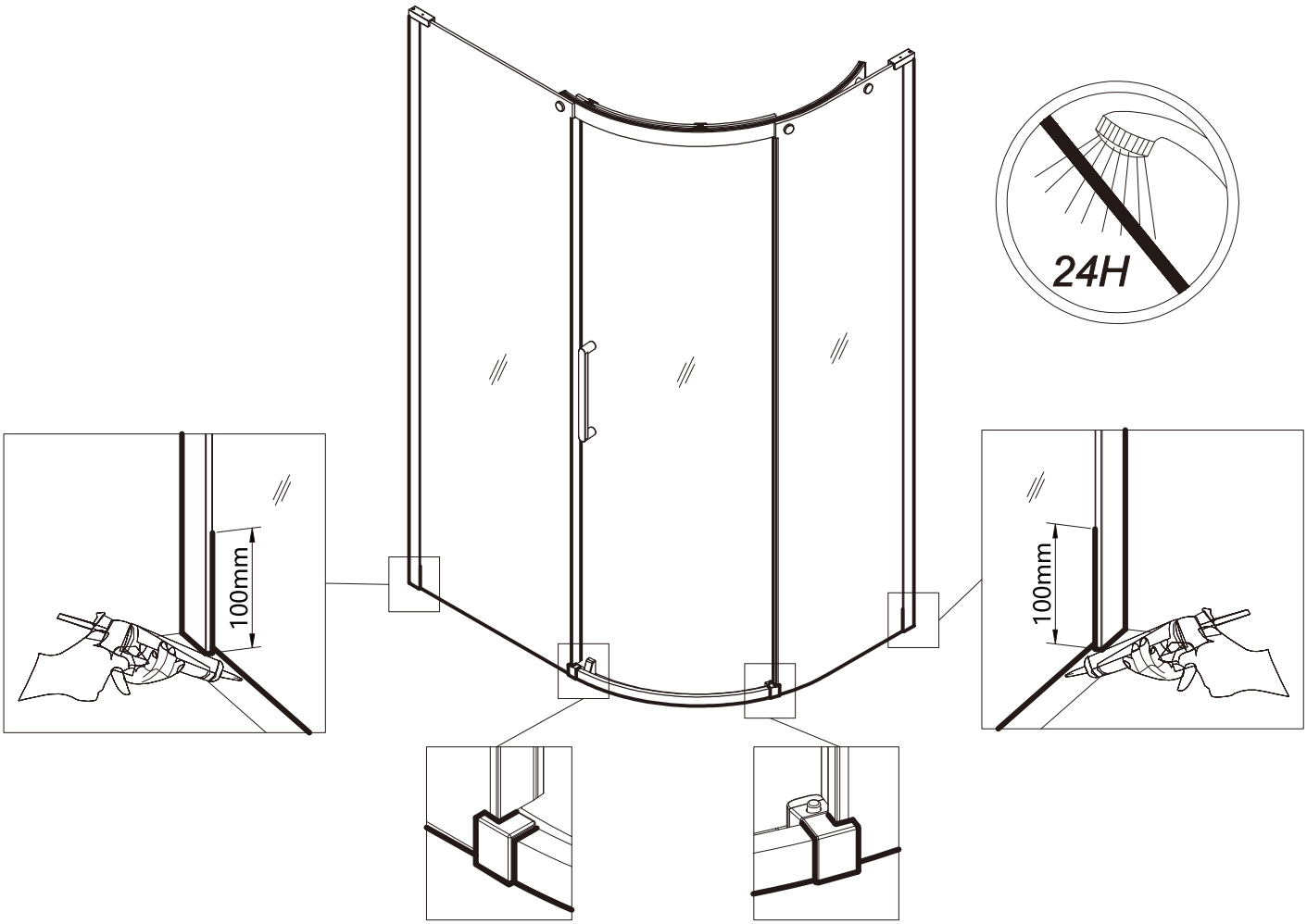

For any further information please contact Crosswater
Phone number, 0345 873 8840
Website, www.crosswater.co.uk
Email address, sales@crosswater.co.uk
The manufacturer reserves the right to make technical modifications without prior notice.

Optix 10 Quadrant

Manufactured to: BS EN 14428

IMPORTANT
BEFORE STARTING THE INSTALLATION ENSURE ALL THE DOOR SIZE MEASUREMENTS CORRESPOND WITH THE INSTALLATION AREA INCLUNDING THE FINISHED TILED/PANELLED WALLS.
RETURNS DUE TO INCORRECT SIZING WILL NOT BE ACCEPTED.

Requires a tray with minimum 60mm wide flat edge and 550mm radius.

OPTIX QUAD 900x900	94kgs
OPTIX QUAD 1000x800	92kgs
OPTIX QUAD 1200x800	103kgs
OPTIX QUAD 1200x900	109kgs

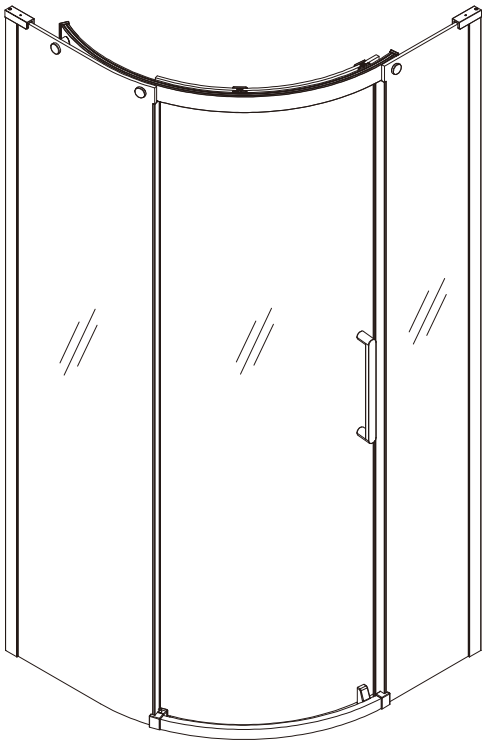

Door opens to the left

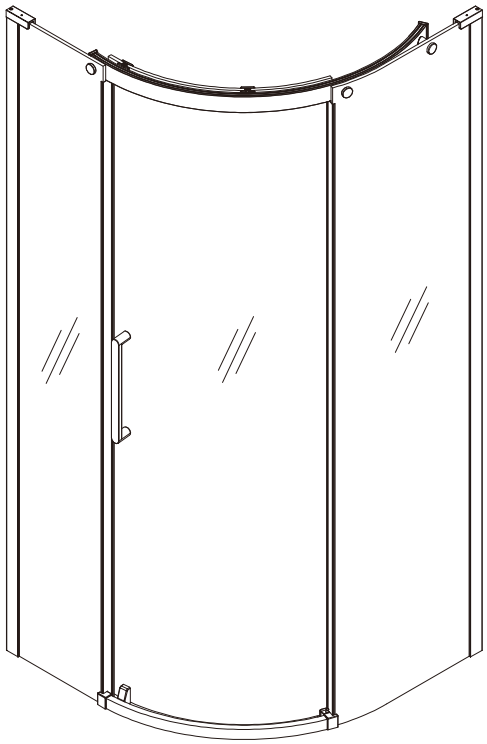

Door opens to the right

Optix 10 Quadrant

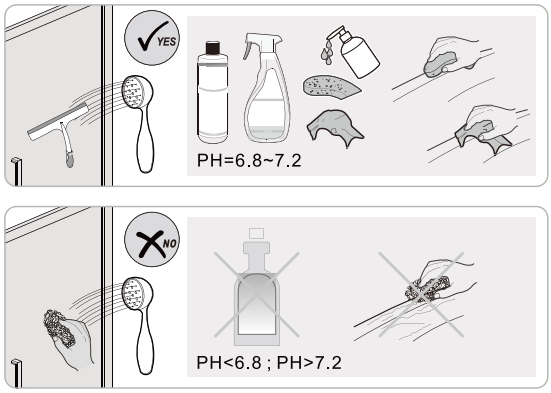

INSTALLATION INSTRUCTIONS

crosswater®

A

IMPORTANT - Please read before installation

Please read these instructions carefully before starting installation and keep in a safe place for future reference. Make a note of the model number.

Check the contents of the pack carefully before installation. Crosswater will not be held responsible for any de-fit / re-fit costs where faulty product has been fitted.
If any fault is found with materials or workmanship, it must be reported immediately to the manufacturer. Remedial action will be taken, based on information received, on condition that:
1. Full details are supplied to the manufacturer;
2. The shower door has not been modified or tampered with.
3. The supplied install components have been used,
4. The manufacturer is informed of any damage/shortages prior to installation.

We do not accept responsibility for any problems that may occur through incorrect installation.

The success of the installation and operation of any shower door is, of course, dependant on the squareness, alignment and construction of the walls to which fixing is to be carried out.

VERY IMPORTANT
You must complete all tiling and grouting, and the shower tray **MUST** be level and fully sealed to the tiles before installation. If you do not fit the shower door onto a tiled surface, or seal the tiles to the tray before installation, water may enter into the wall behind the wall profiles.

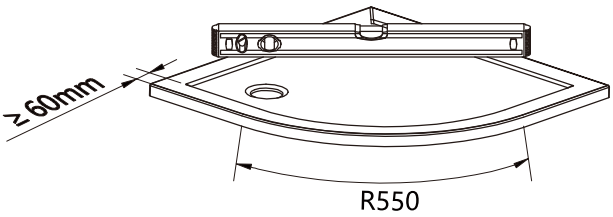

Optix quads require a shower tray with minimum 60mm flat/level outside edge. and 550mm radius.

The shower waste needs to be fitted in accordance with manufacturer's guidelines.

INSTALLATION - Advise and safety

The installation instructions are based on typical use and conditions.

All doors are designed to open outwards only.

Ensure that the product can be fixed to a solid masonry/brick wall or suitable timber stud work grade C16-C24 in the area behind the wall profile and wall brackets.

These hints have been prepared for your guidance, you must exercise due care at all times.

For Health and Safety 2 people must carry out the installation of this shower enclosure.

Handle glass with care. Although the glass supplied is toughened safety glass(**EN12150**), impacts can damage both the glass and the frame.

If fitting a tray we recommend a drainage test is carried out before the tray is tiled in position.

Warning!
Please check for any hidden pipes or cables before drilling holes in the wall.

When using power tools always follow the manufacturers user instructions.

Leave the silicone sealant to dry for 24 hours before using the shower door.

CARE AND CLEANING

Do not use solvents or abrasive material or chemicals to clean the shower door.

Only clean using soapy water and soft cloth, rinse thoroughly afterwards.

INSTALLATION - Left and Right hand

The door has left and right hand versions.
This instruction shows the RIGHT HAND installation. Reverse for LEFT HAND opening.

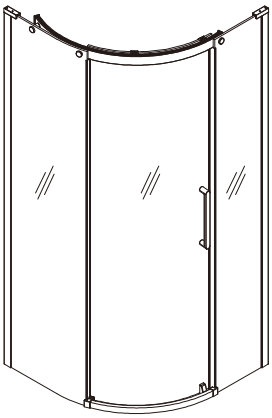

Door opens to left

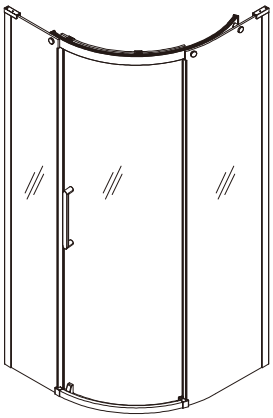

Door opens to right

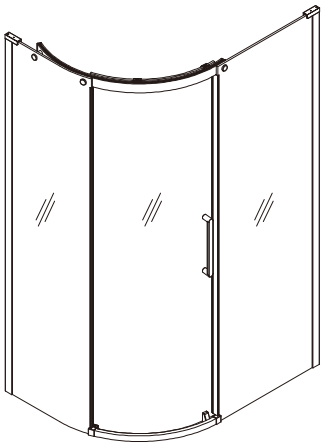

Door opens to left

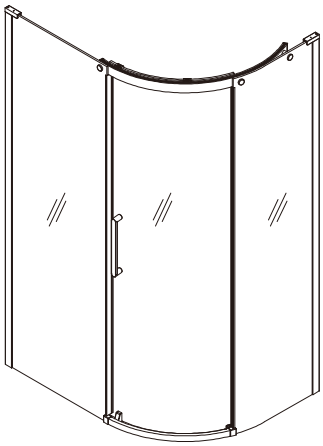

Door opens to right

crosswater

Optix 10 Quadrant

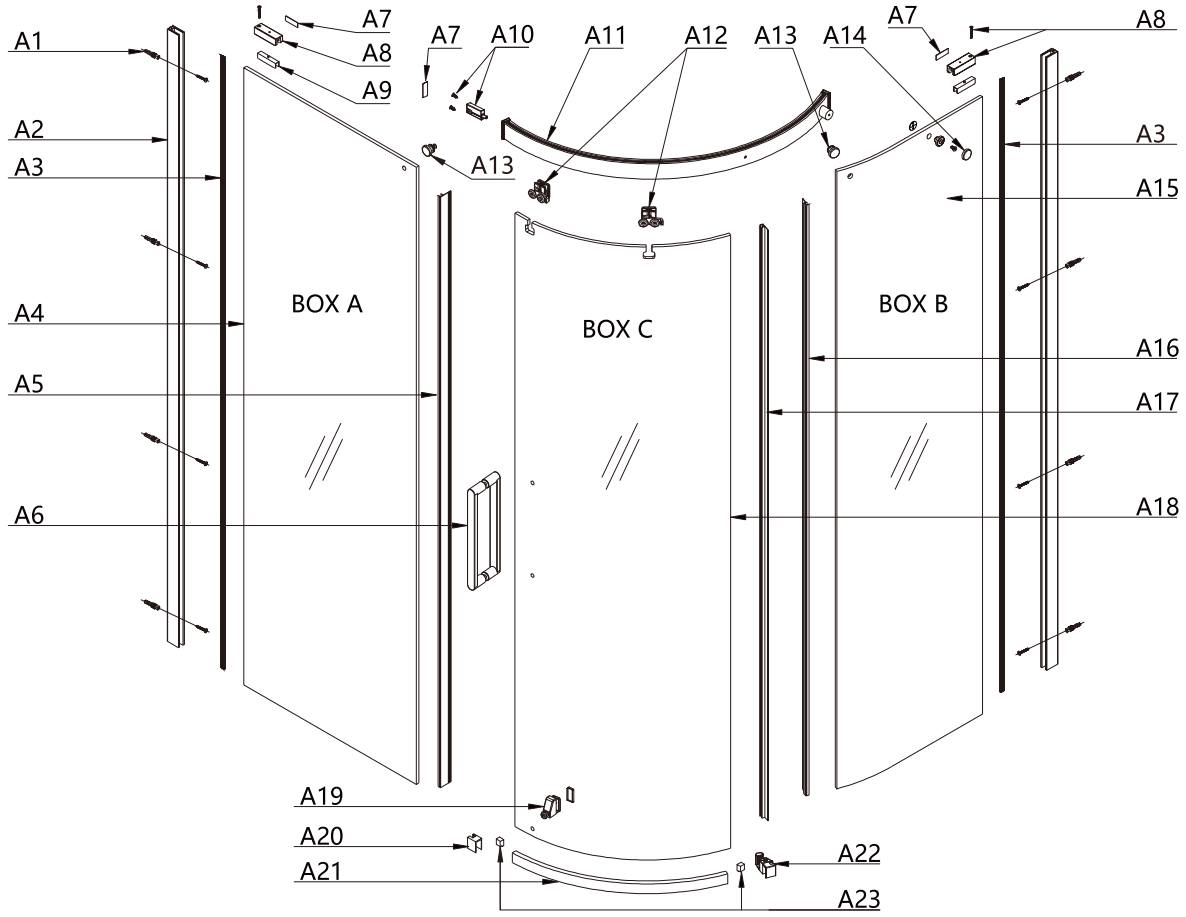

A 1	Wall plug and 4x50mm screw	8+8
A 2	Wall profile	x2
A 3	Wall profile seal	x2
A 4	Flat fixed Glass	L R x1
A 5	Flat Glass Seal	x1
A 6	Handle	x1
A 7	Bracing Bar Screw Cover	x3
A 8	Bracing bar	Lx1 Rx1
A 9	Bracing bar gasket	x2
A 10	Top rail soft damper	L R x1
A 11	Top Profile	L R x1
A 12	Top roller	x2
A 13	Top Rail Fixing Pin	x2
A 14	Top Rail Fixing Pin Cover	x1
A 15	Curved Fixed Panel	L R x1
A 16	Fixed Curved Panel Vertical Seal	x1
A 17	Moving Curved Glass Vertical Seal L=1930mm	x1
A 18	Curved Moving Panel	L R x1
A 19	Bottom roller	x1 Replacement roller with spring x1* Only required if the door is out of alignment see page 10
A 20	Bottom profile cap	L R x1
A 21	Bottom Profile	L R x1
A 22	Bottom guide	L R x1
A 23	Bottom Profile Spacer	x2
A 24	Allen key	2mm x1 2.5mm x1 3mm x1 4mm x1 5mm x1

crosswater

Installation tools required - not included

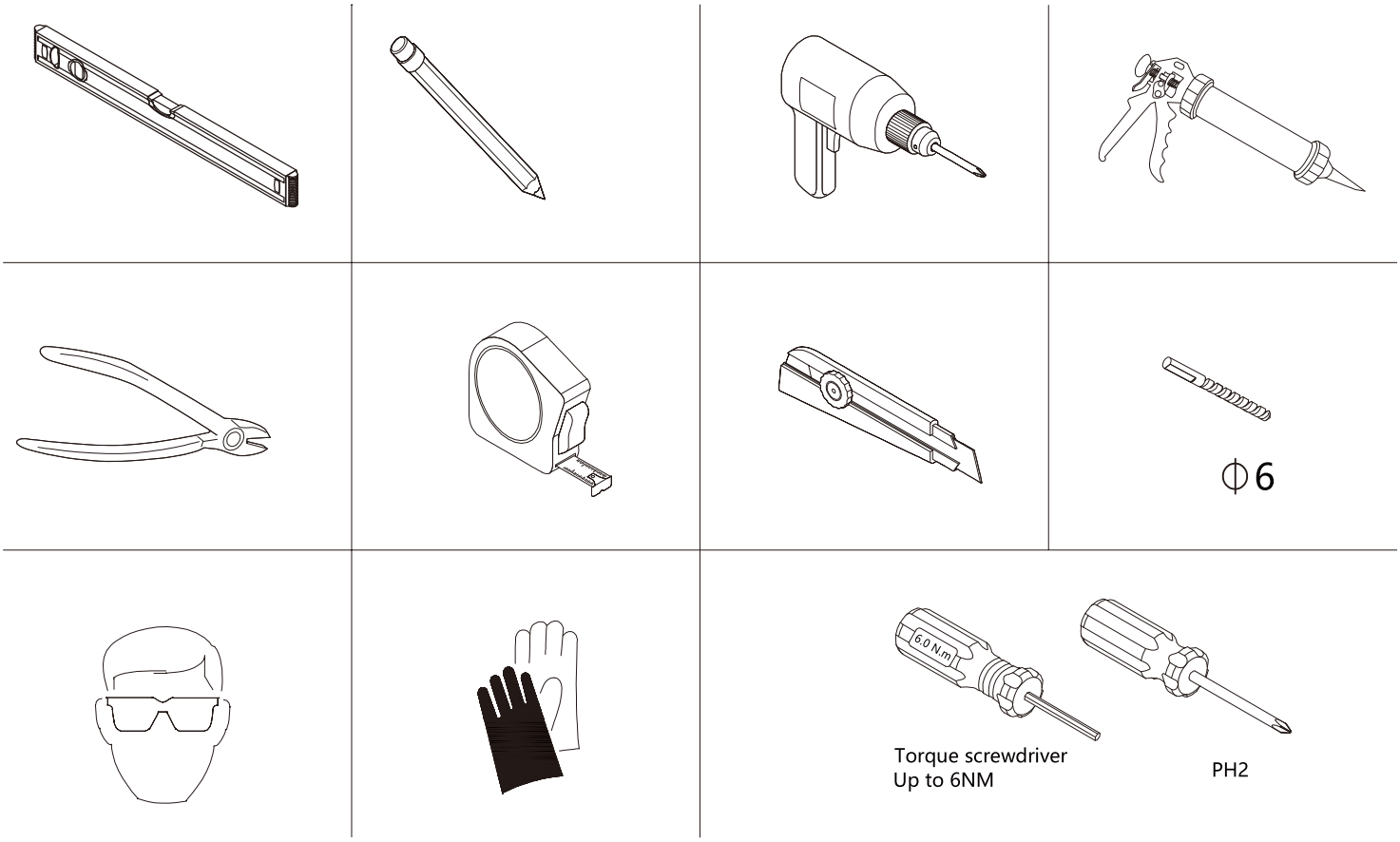

Step 1

LH	A	B
900x900	860-880mm	860-880mm
1000x800	960-980mm	760-780mm
1200x800	1160-1180mm	760-780mm
1200x900	1160-1180mm	860-880mm

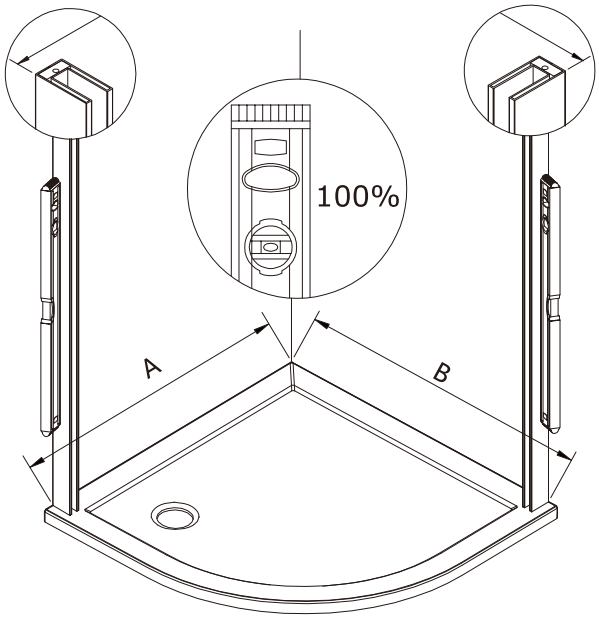

RH	A	B
900x900	860-880mm	860-880mm
1000x800	760-780mm	960-980mm
1200x800	760-780mm	1160-1180mm
1200x900	860-880mm	1160-1180mm

Step 2

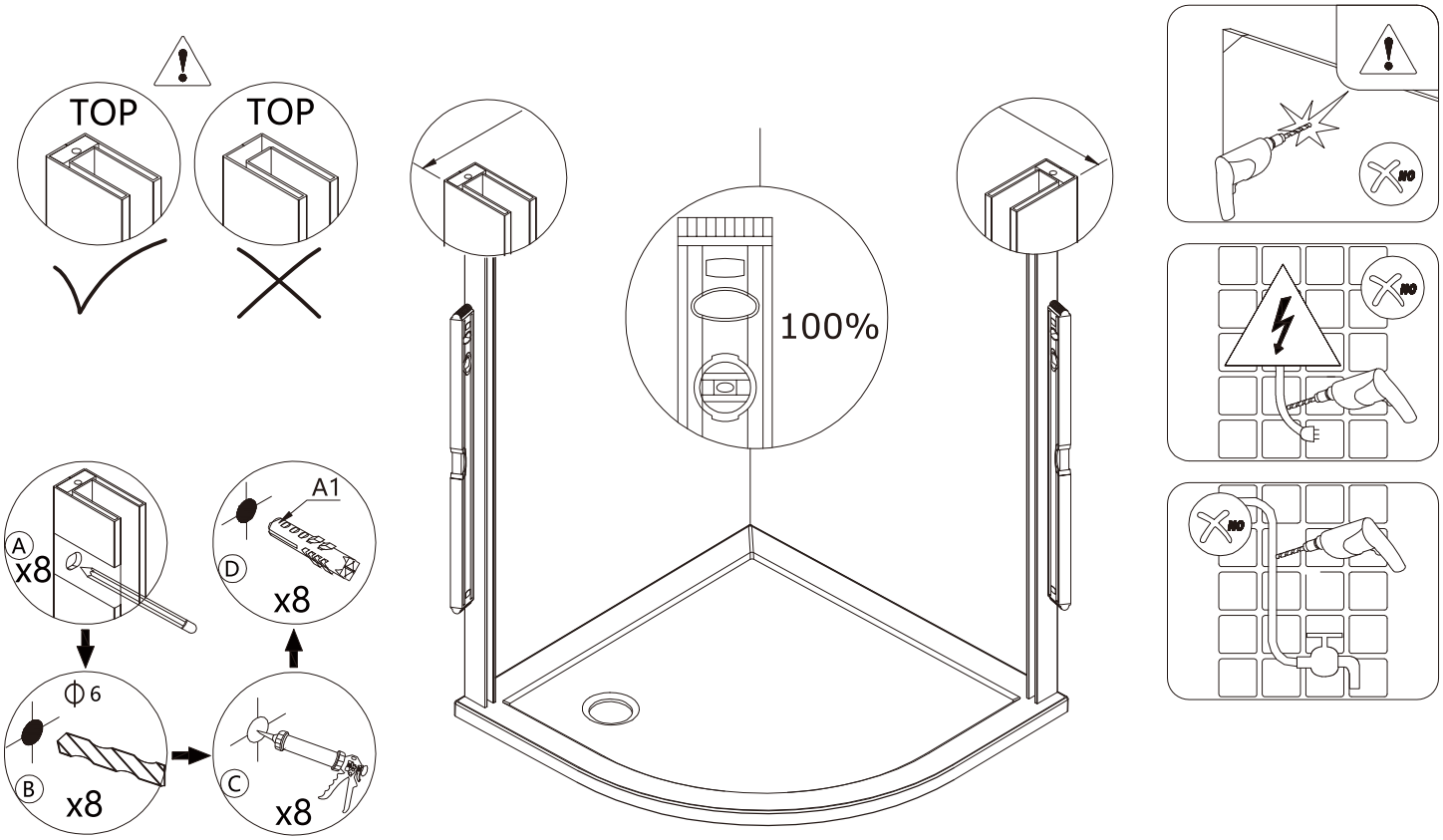

Step 3

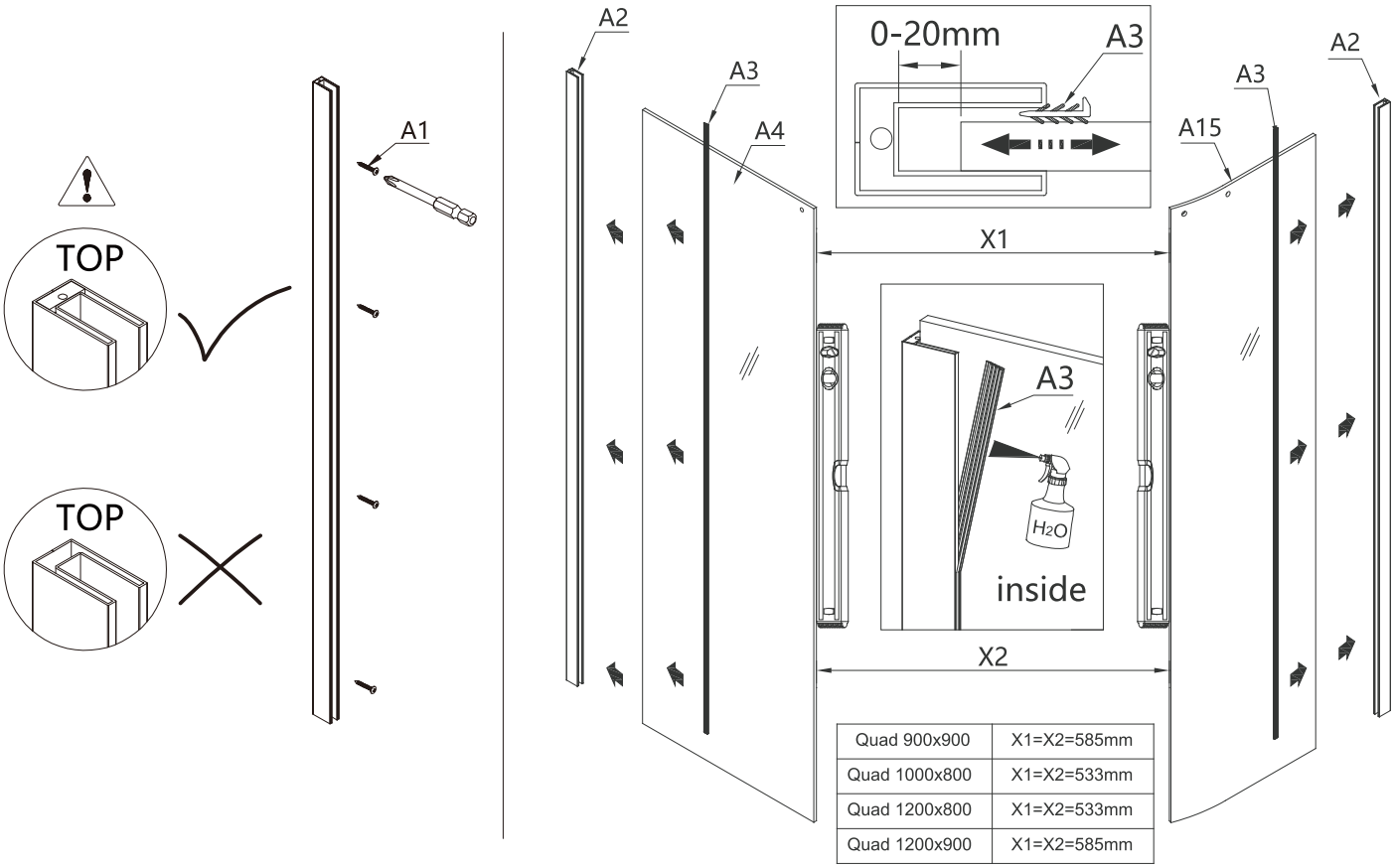

Quad 900x900	X1=X2=585mm
Quad 1000x800	X1=X2=533mm
Quad 1200x800	X1=X2=533mm
Quad 1200x900	X1=X2=585mm

crosswater

Step 4

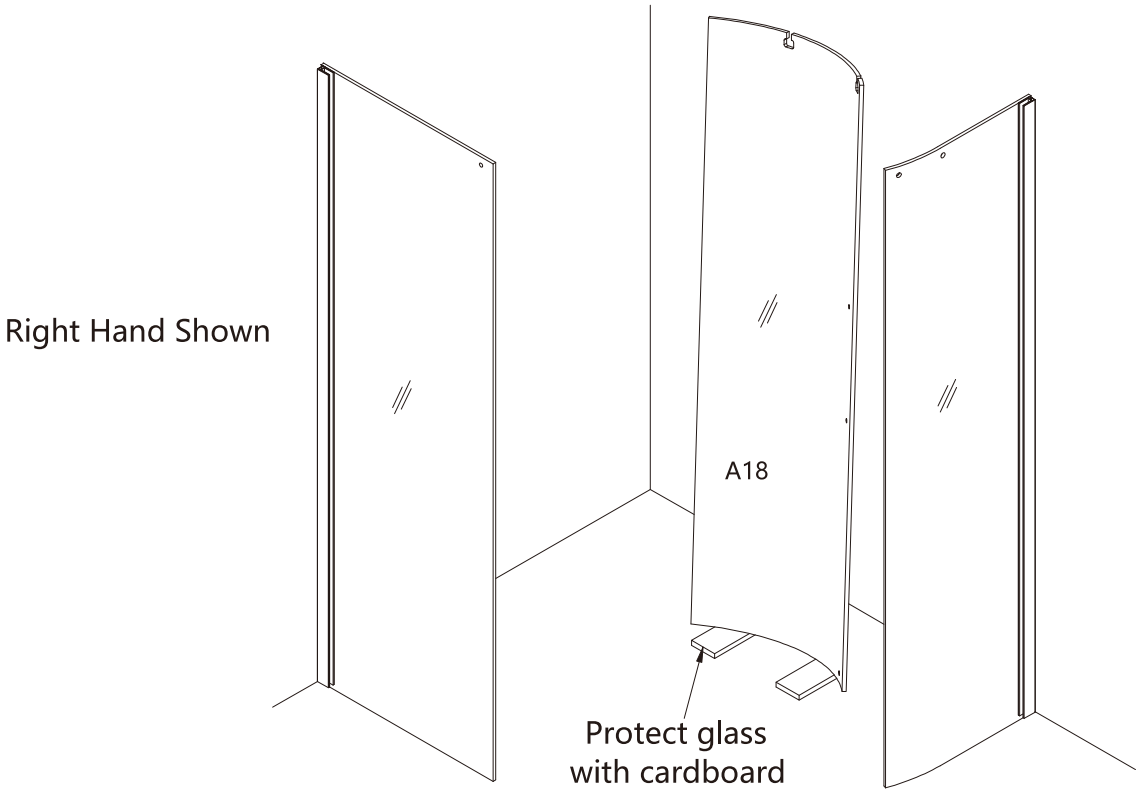

Step 5

Note: do not fully tighten screws until the top rail is level.

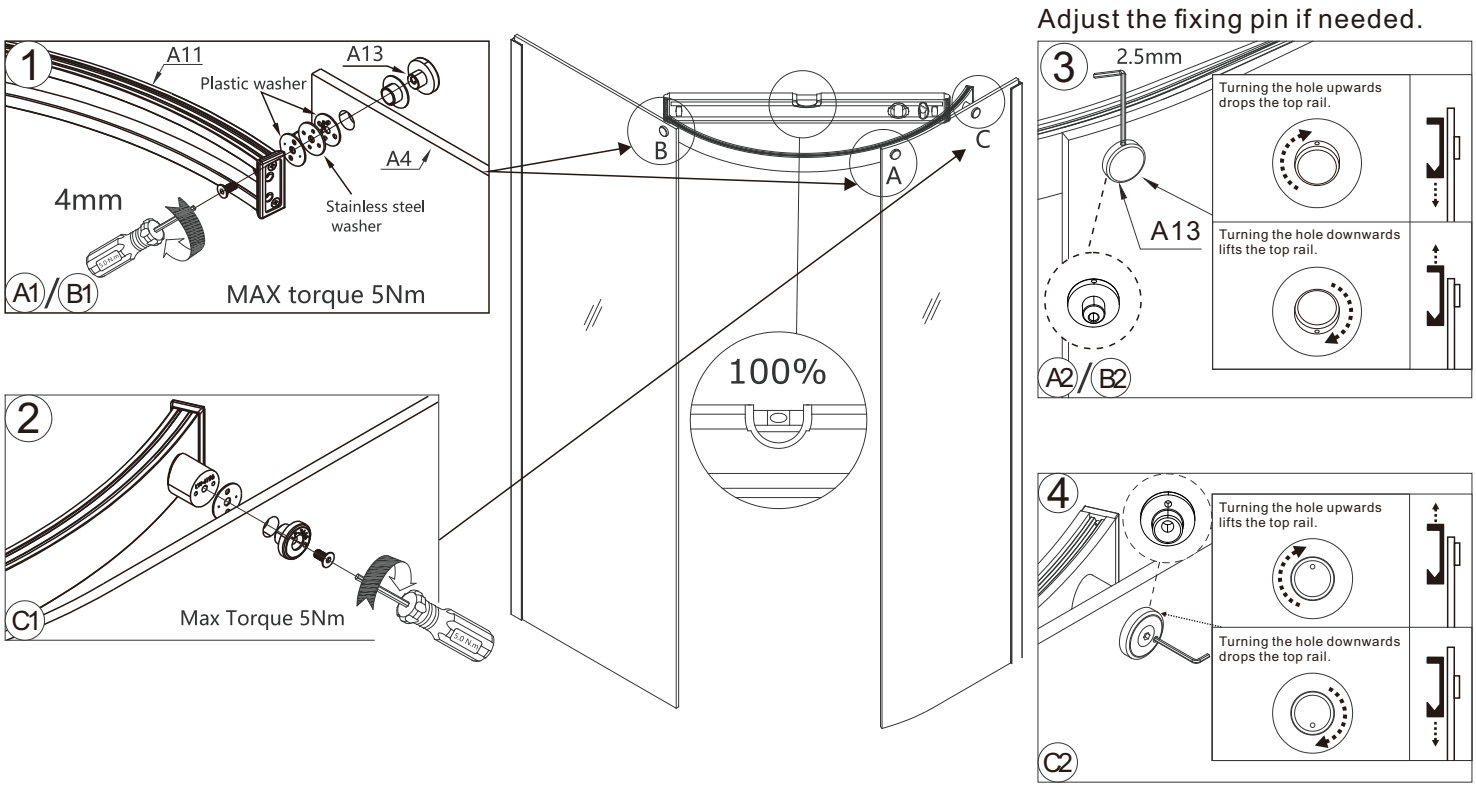

Step 6

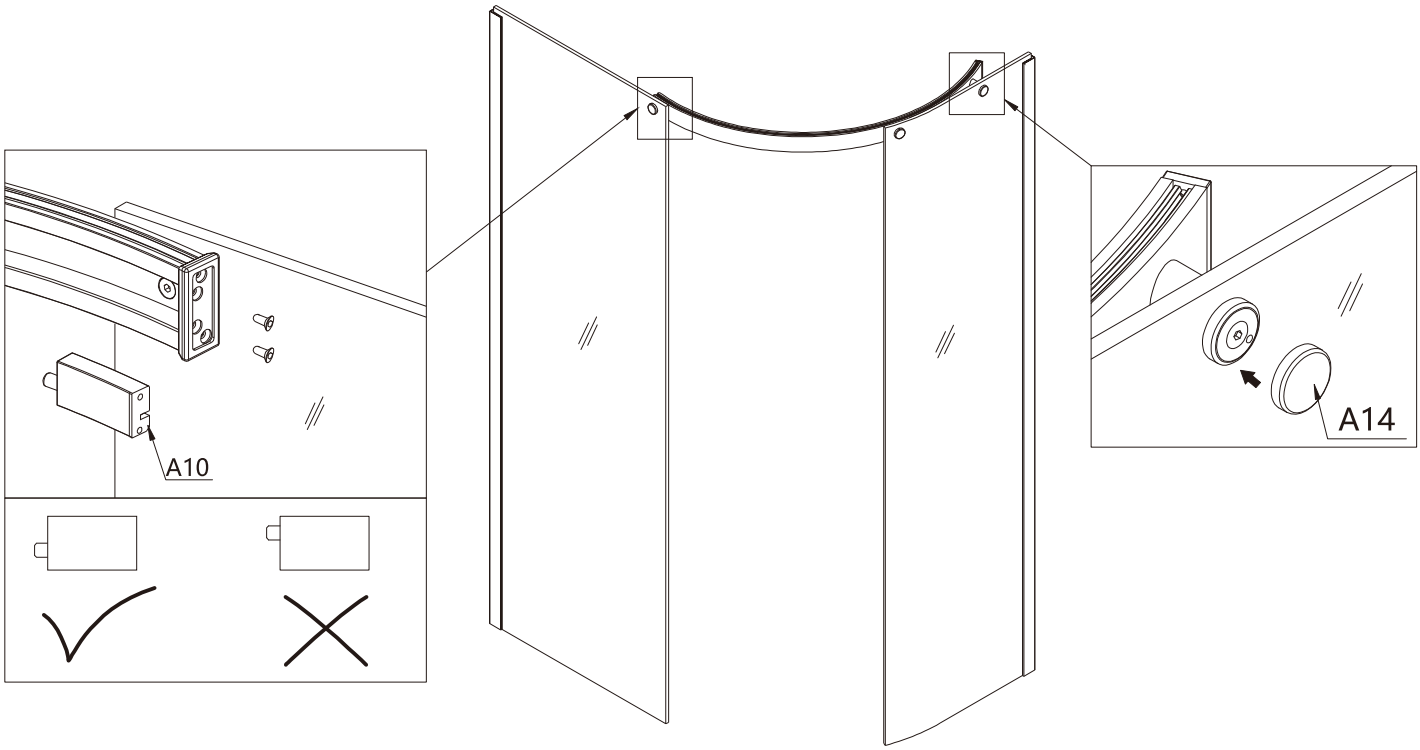
A10
A14

Step 7

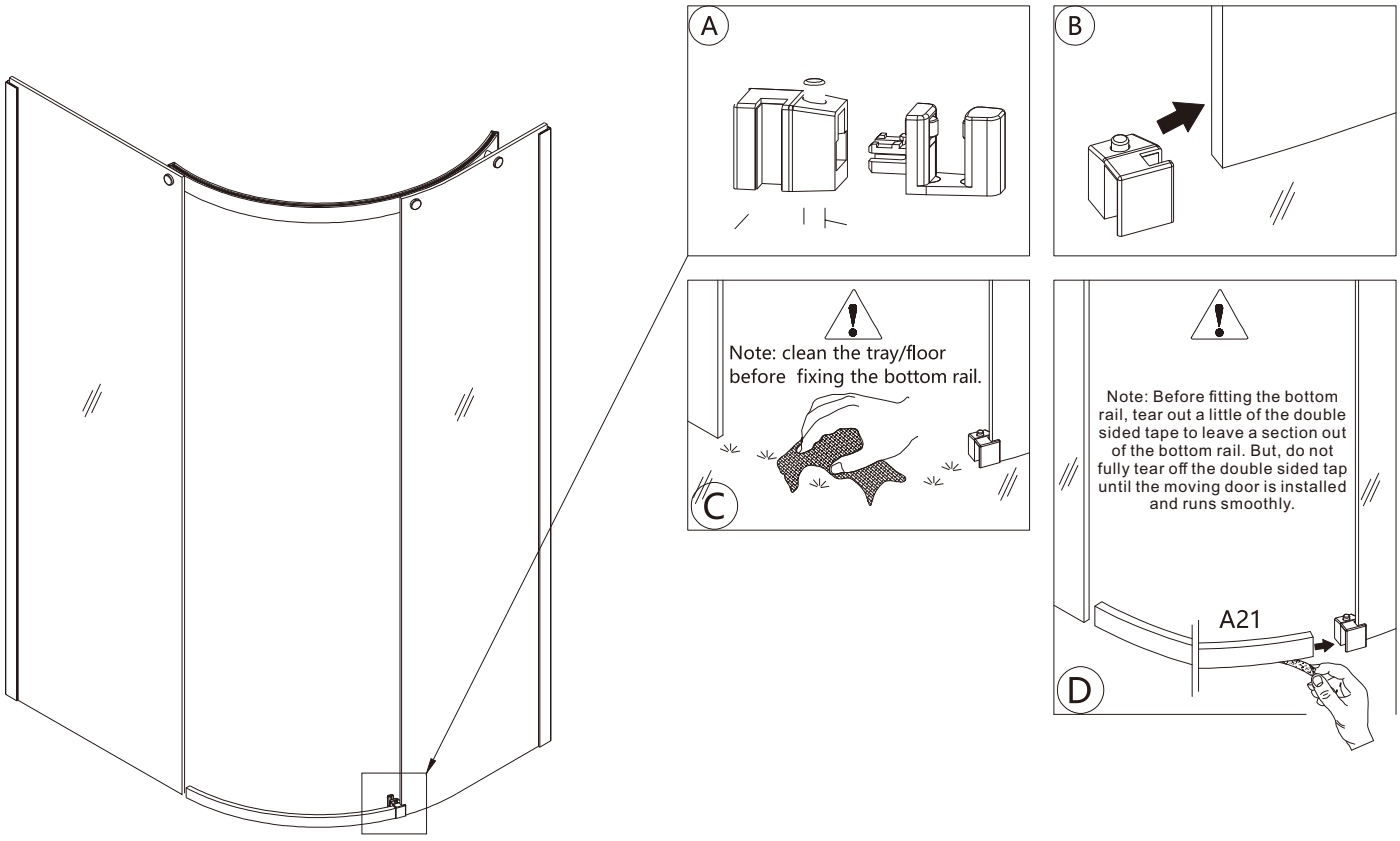
A
B
Note: clean the tray/floor before fixing the bottom rail.
C
Note: Before fitting the bottom rail, tear out a little of the double sided tape to leave a section out of the bottom rail. But, do not fully tear off the double sided tap until the moving door is installed and runs smoothly.
A21
D

Step 8

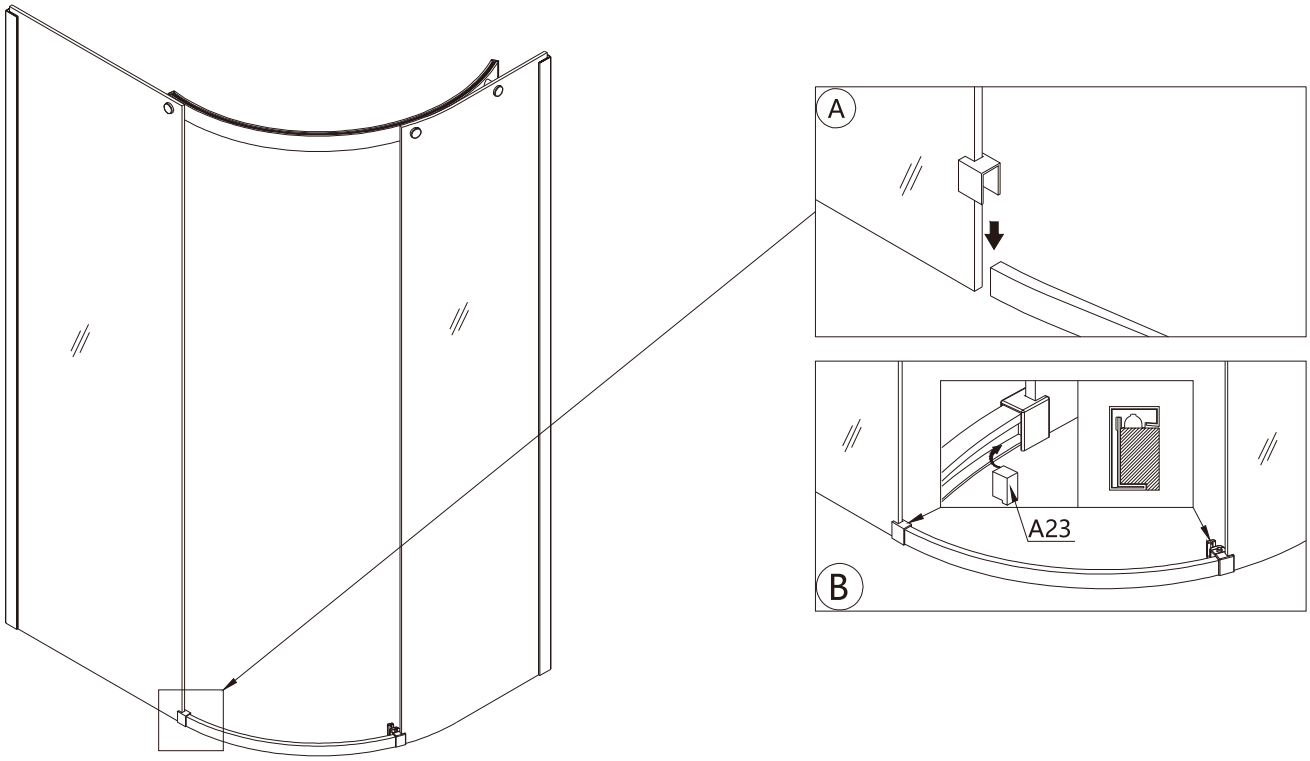

Step 9

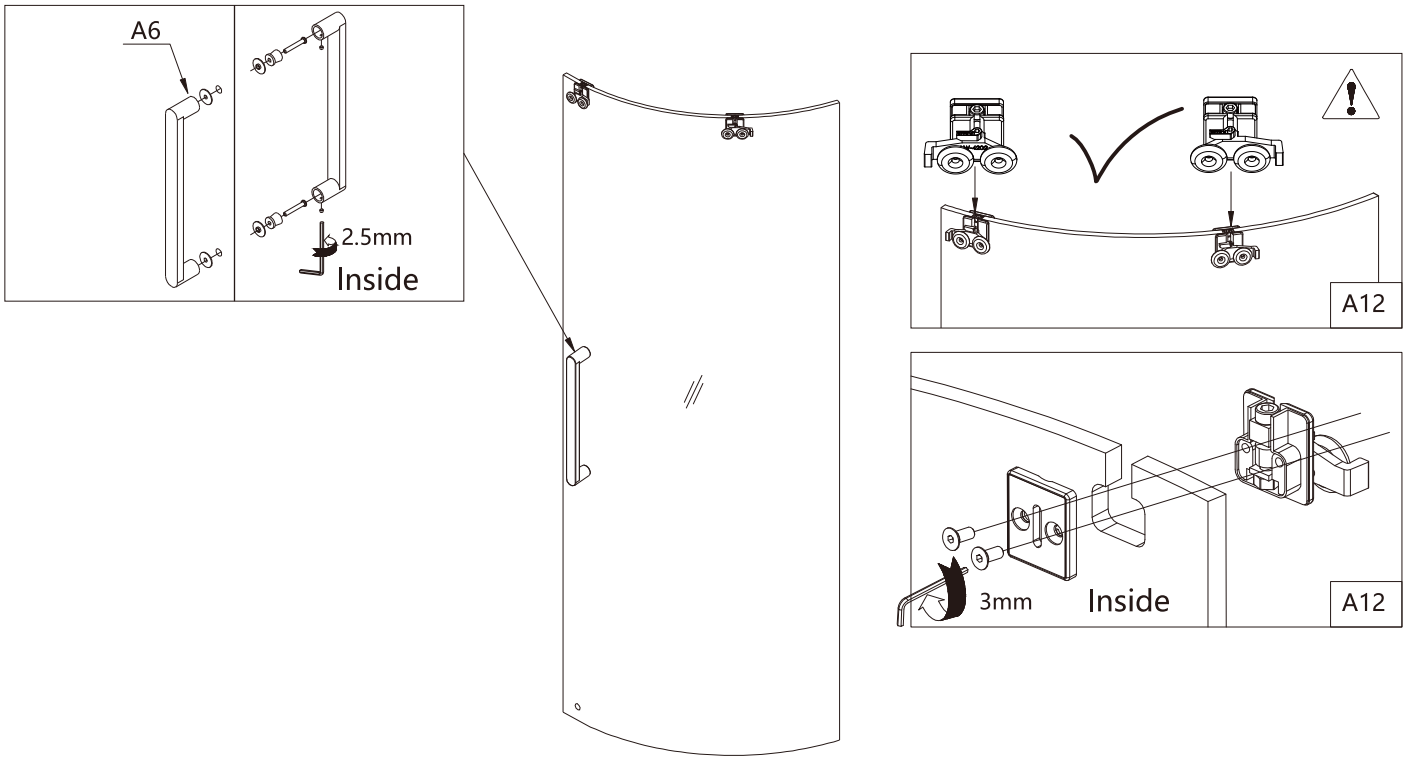

Step 10

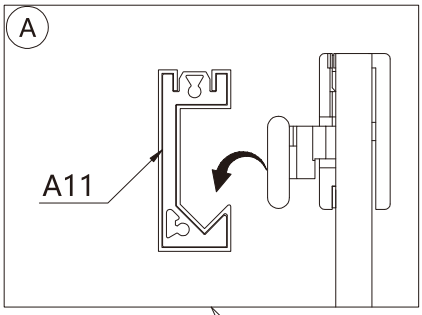

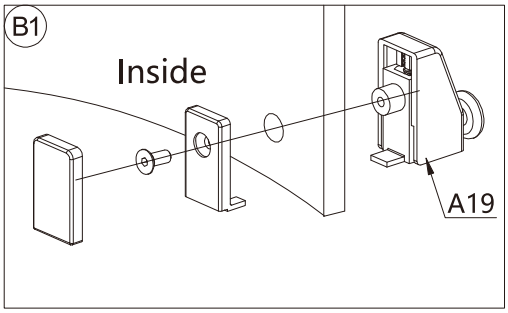

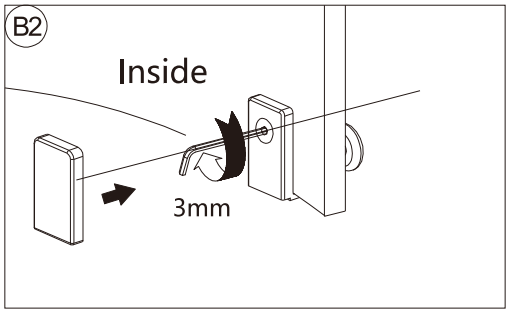

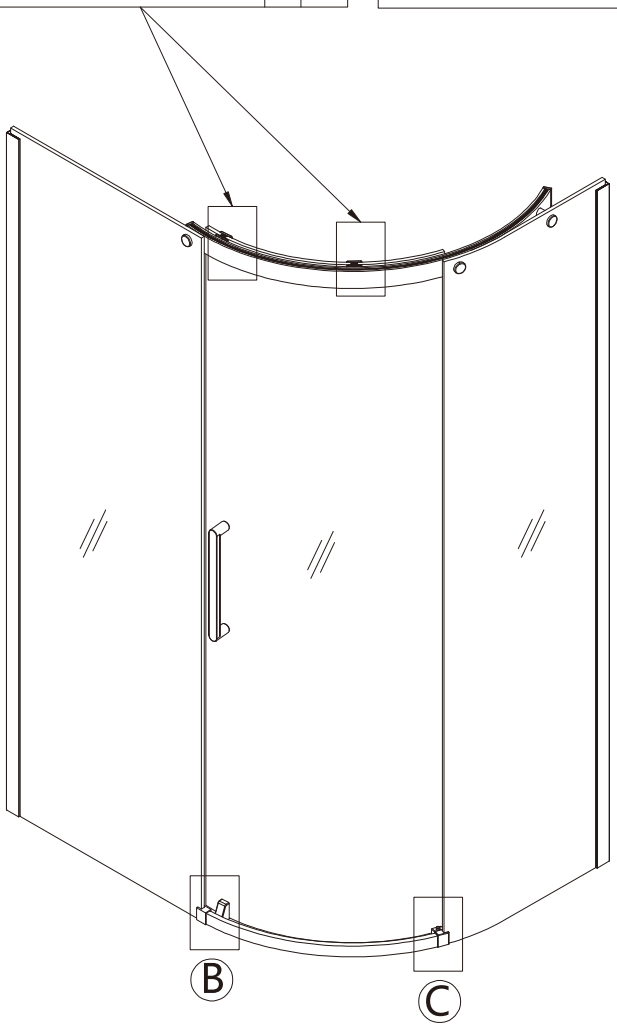

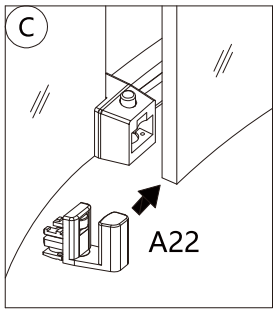

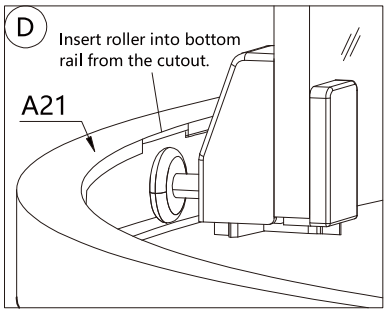

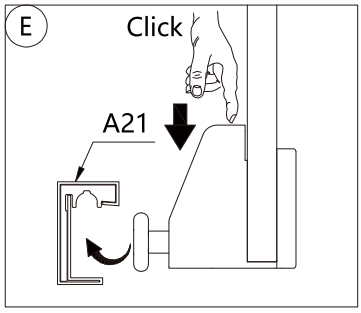

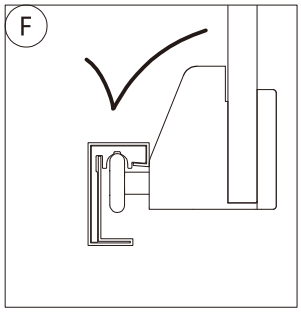

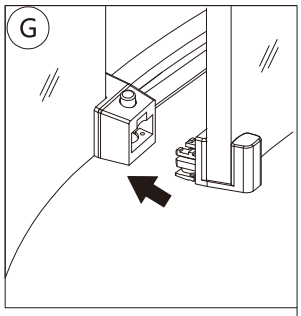

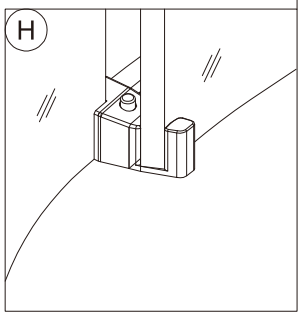

If door adjustment is needed, follow the below steps to take out the bottom roller from the bottom rail.

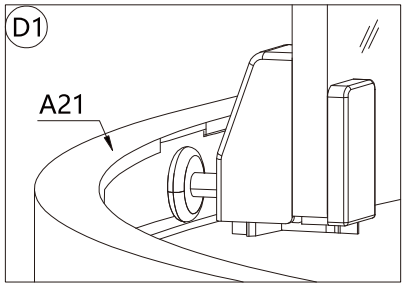

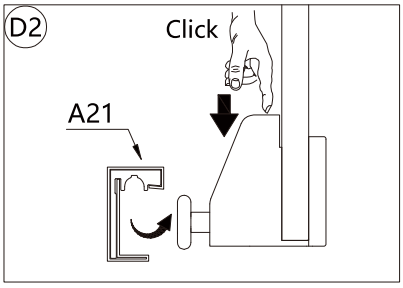

Step 11

If the door doesn't run smoothly, please follow the below steps to adjust.

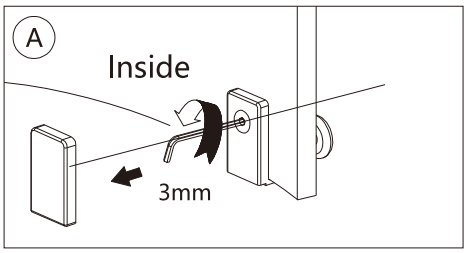

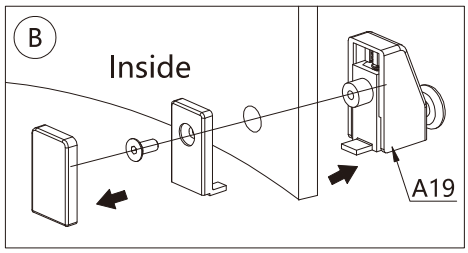

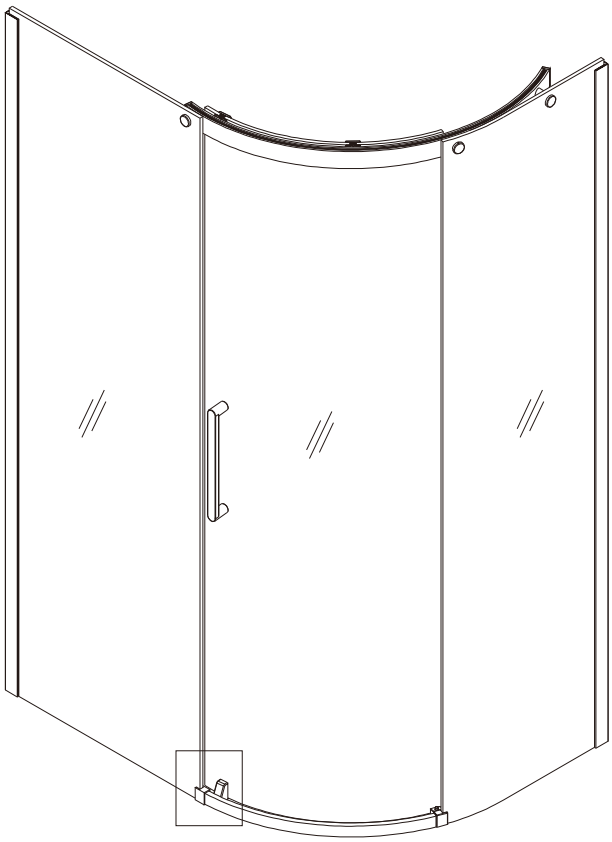

Option1:
Extend the pin slightly
(MAX 6mm)

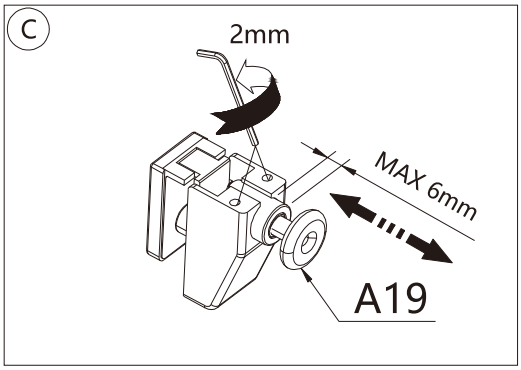

Option2:
Use the replacement roller with
spring(A19)

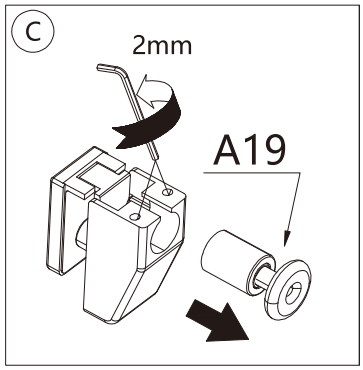

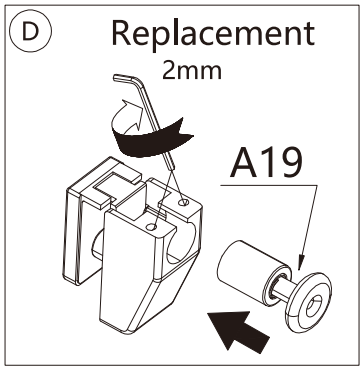

Step 12

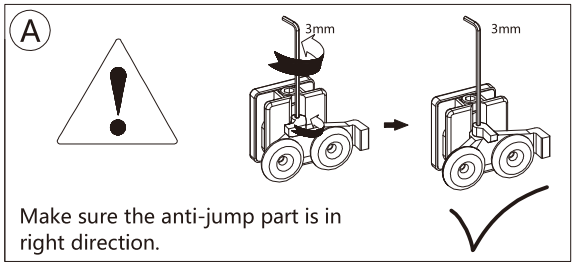

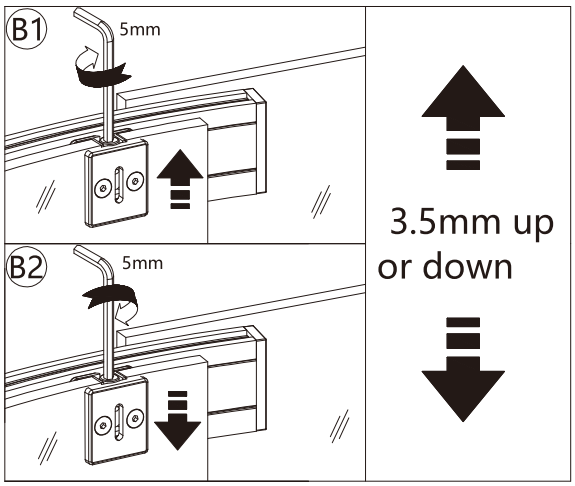

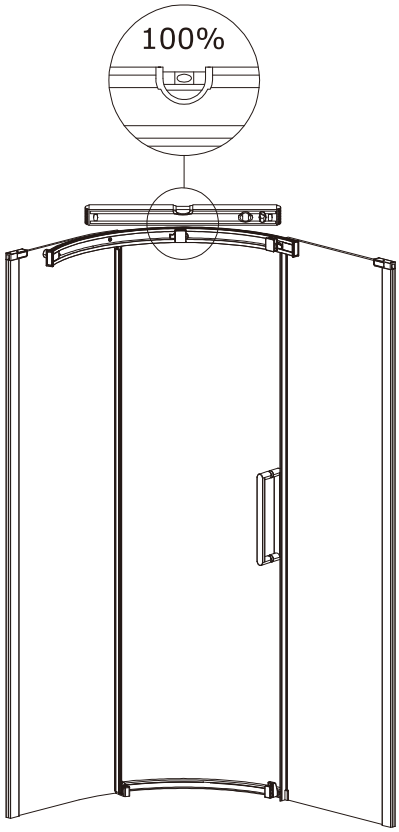

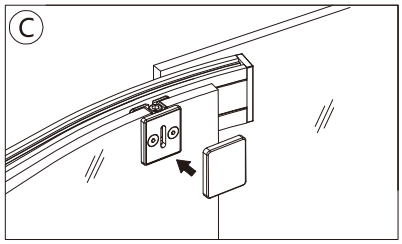

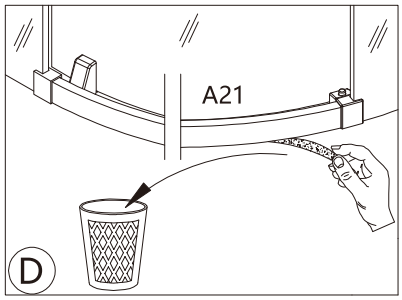

Step 13

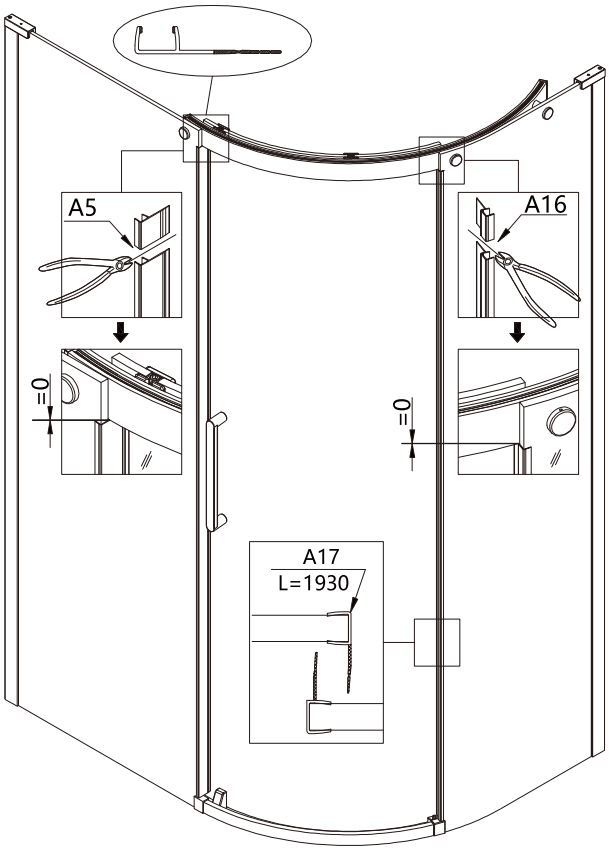

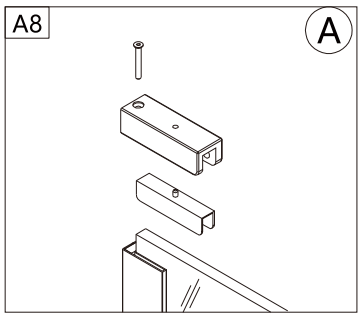

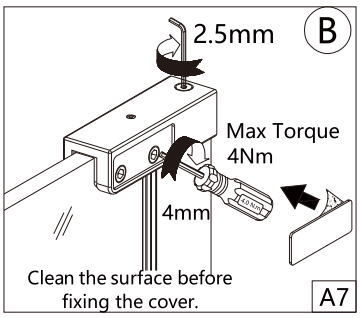

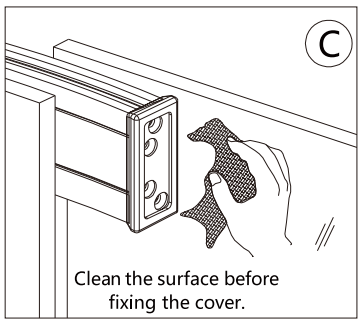

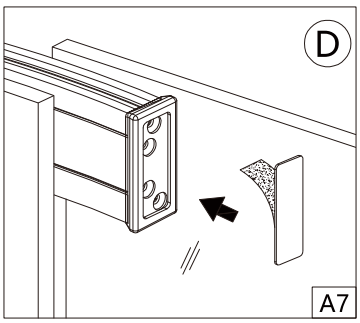

Step 14

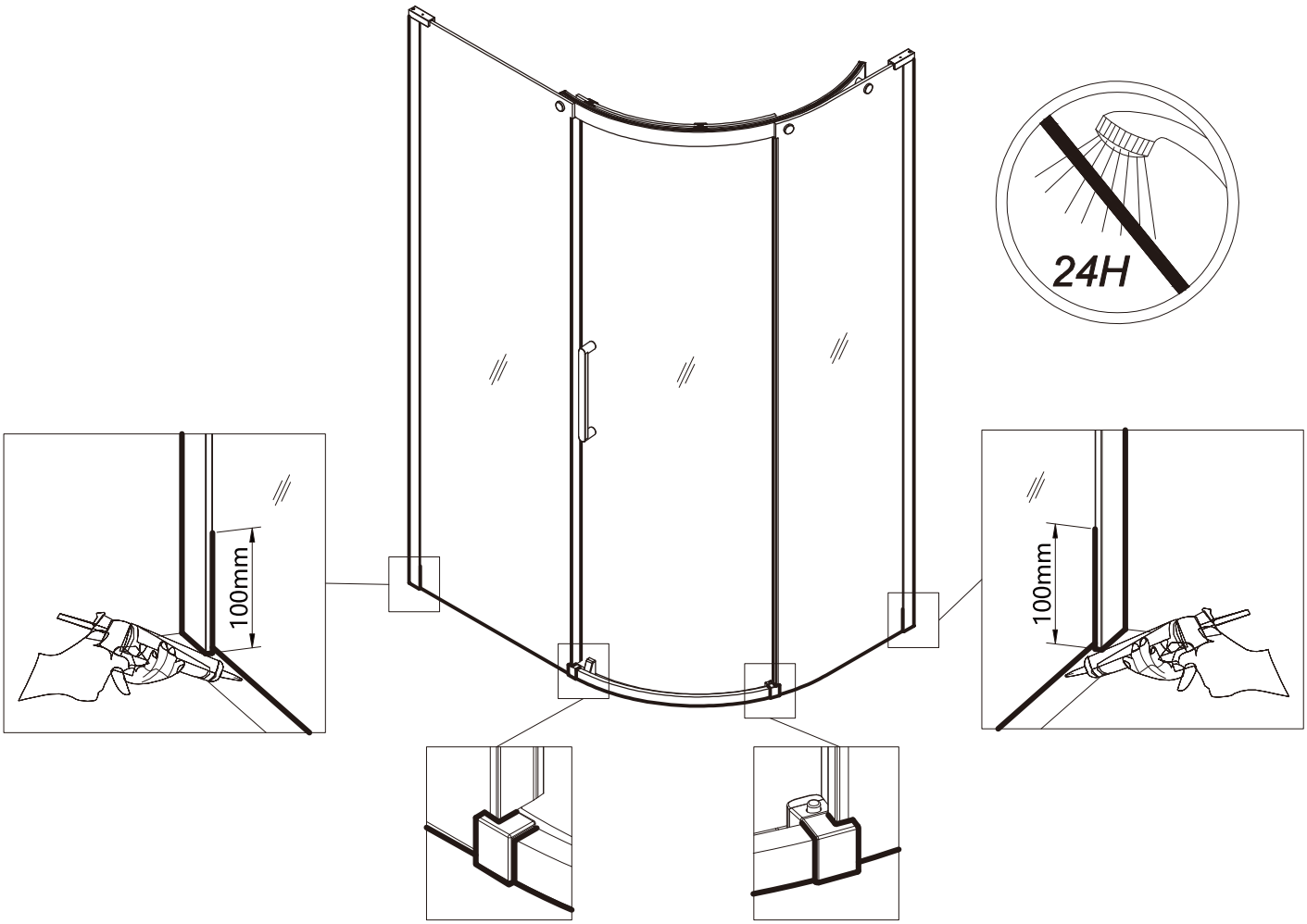

For any further information please contact Crosswater
Phone number, 0345 873 8840
Website, www.crosswater.co.uk
Email address, sales@crosswater.co.uk
The manufacturer reserves the right to make technical modifications without prior notice.