CISTERN & FRAME

Slimline Dual Flush Concealed Cistern

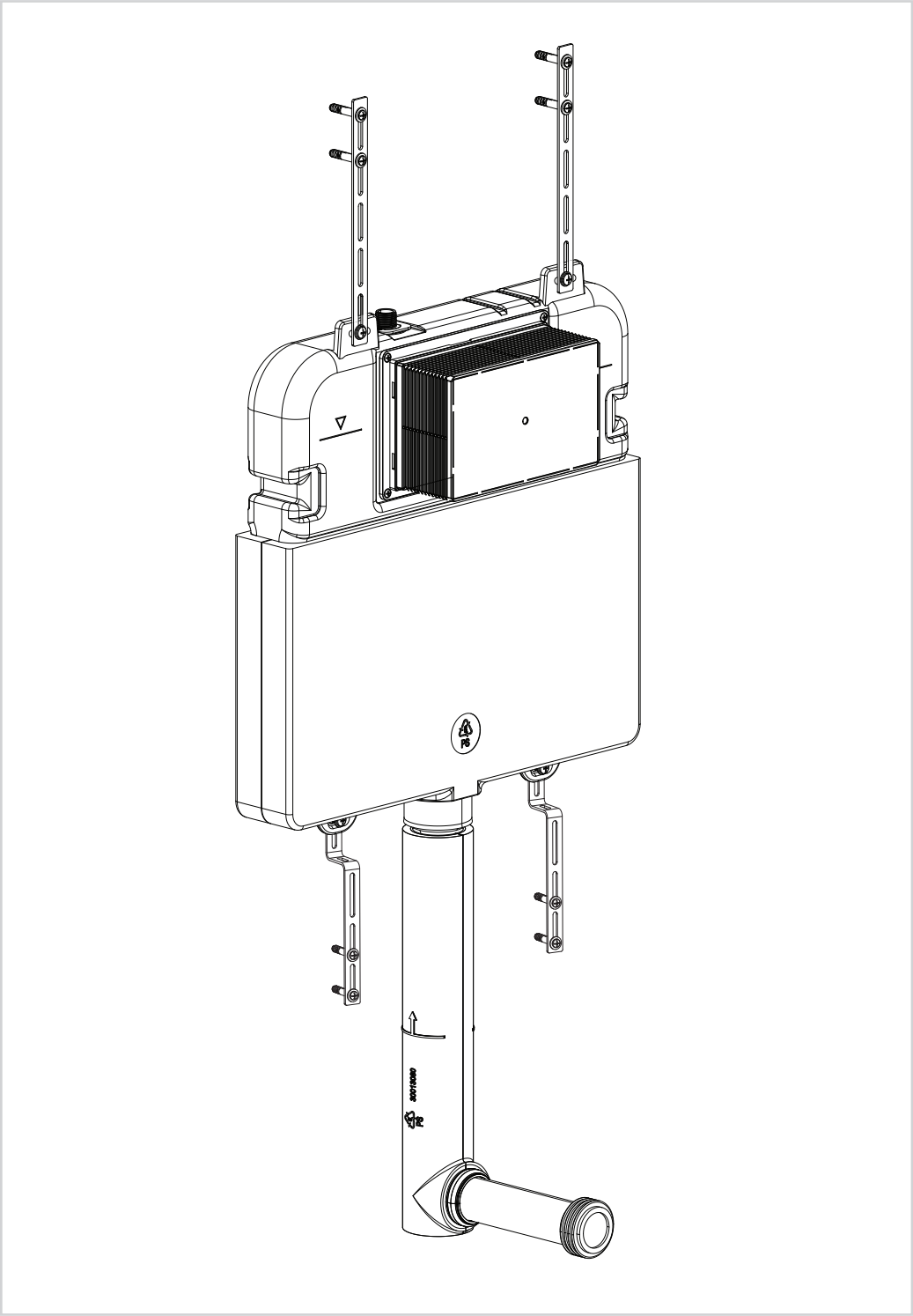

PRODUCT CODES:

WCC51X51R

BR_WCC51X51R

BEFORE YOU START

i

IMPORTANT INFORMATION BEFORE YOU START

Please read carefully and keep this information for reference. Thank you for buying a Bathroom Brands Product.
To ensure that it works to its full potential, it needs to be fitted correctly. Check the contents of the pack carefully before installation.
Bathroom Brands will not be held responsible for any re-fit costs where faulty product has been. If any fault is found with materials or workmanship, it must be reported immediately to the manufacturer. Remedial action will be taken based on information received, on condition that:

1. Full details are supplied to the manufacturer.
2. The product has not been modified or tampered with.
3. The manufacturer is informed of any damage/shortages prior to installation.
4. The product has not been installed, or attempts have been made to install.

We do not accept responsibility for any problems that may occur through incorrect installation. This product should only be installed by a suitably qualified plumber/installer.
Should the installation be completed by a non-qualified person any product guarantee maybe considered invalid.

1

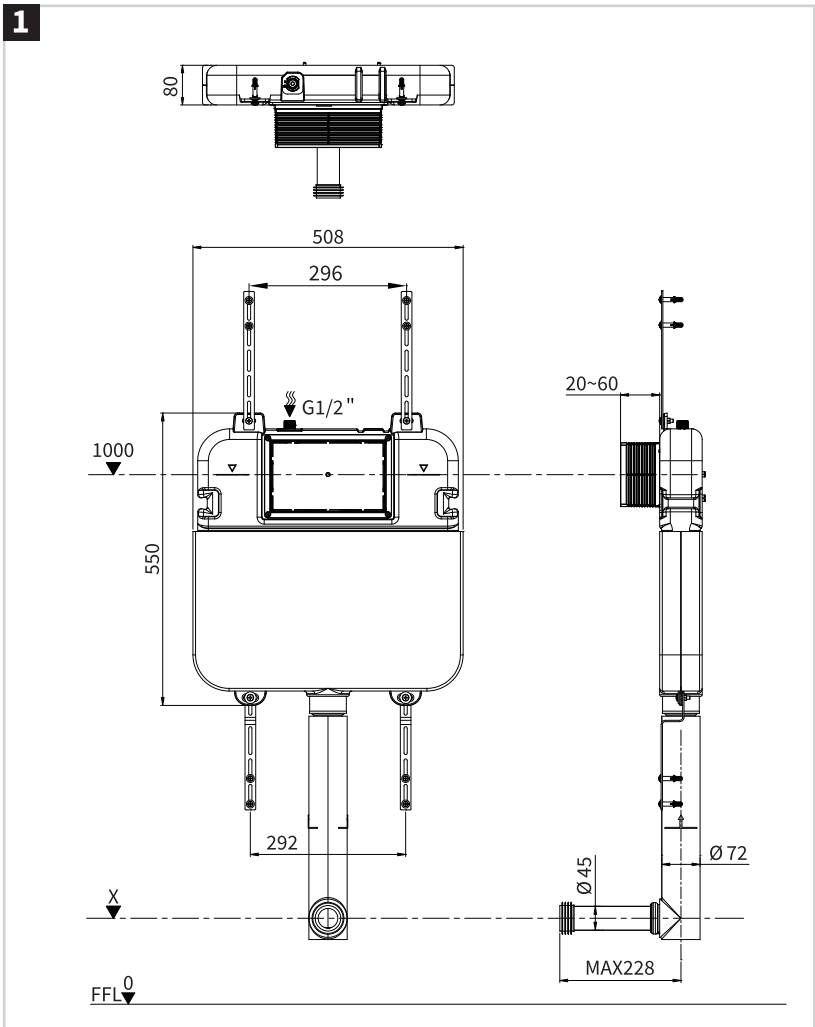

General dimension and water supply drawing. Watter supply to cistern.
(water supply should be connection to angle valve inside cistern)

INSTALLATION

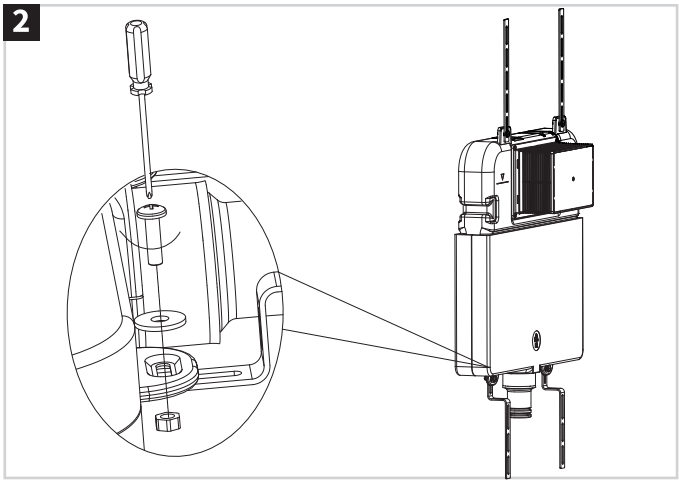

Mount straigh straps and Z-shaped straps, confirm the position of 1M line and drilling

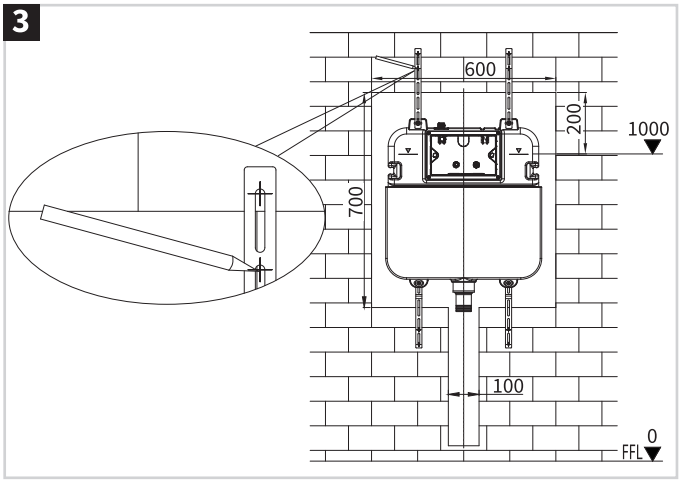

Tip: Drilling position should be confirmed according to the actual installation position of cistern.

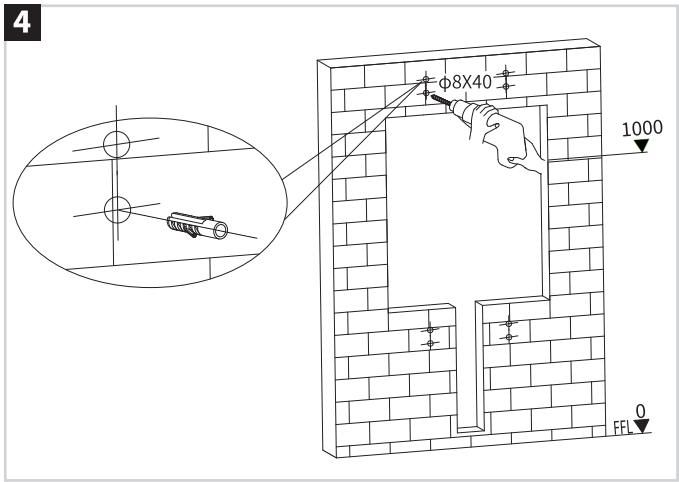

Drilling and installation of expansion screw

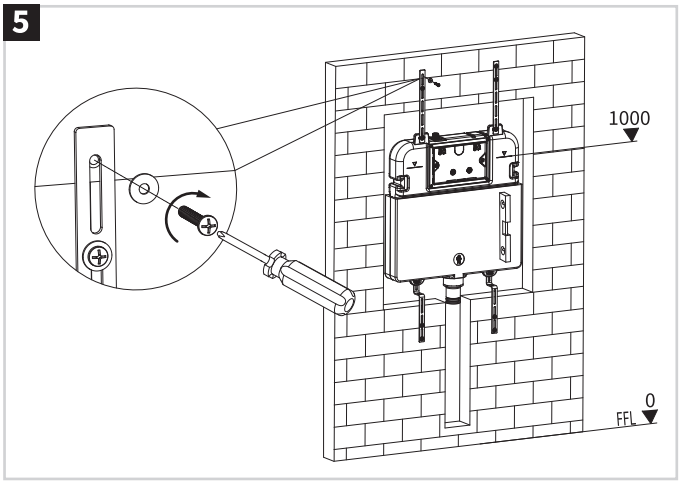

Installation of concealed cistern

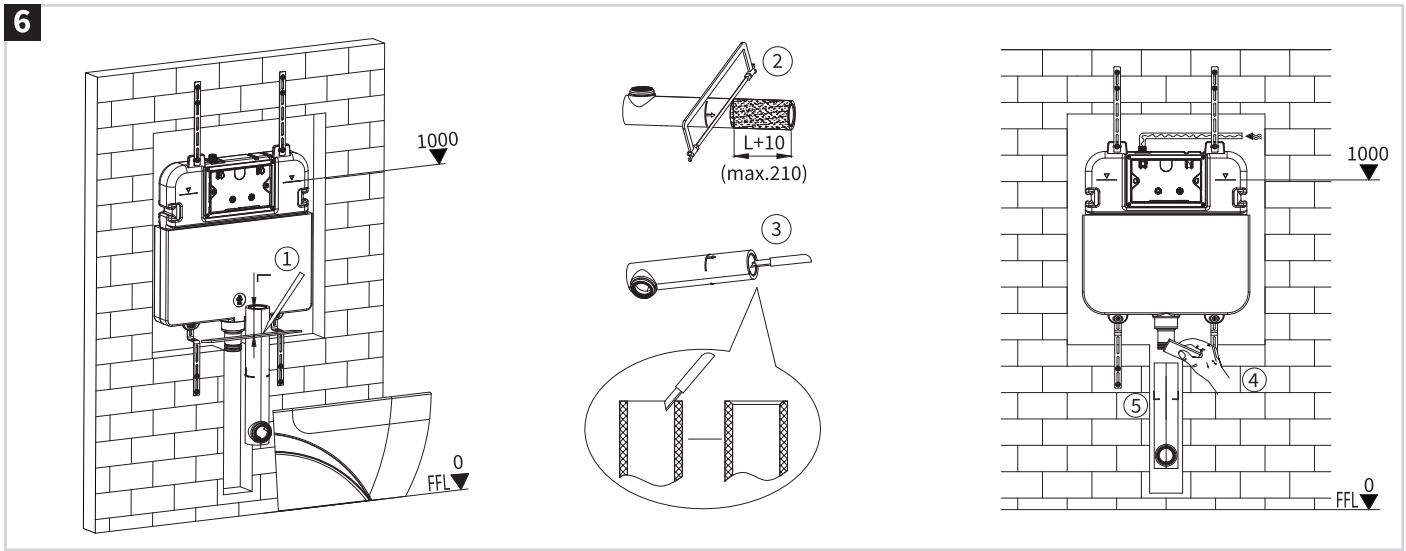

Mount connecting pipe and contact water supply pipe.

INSTALLATION

7

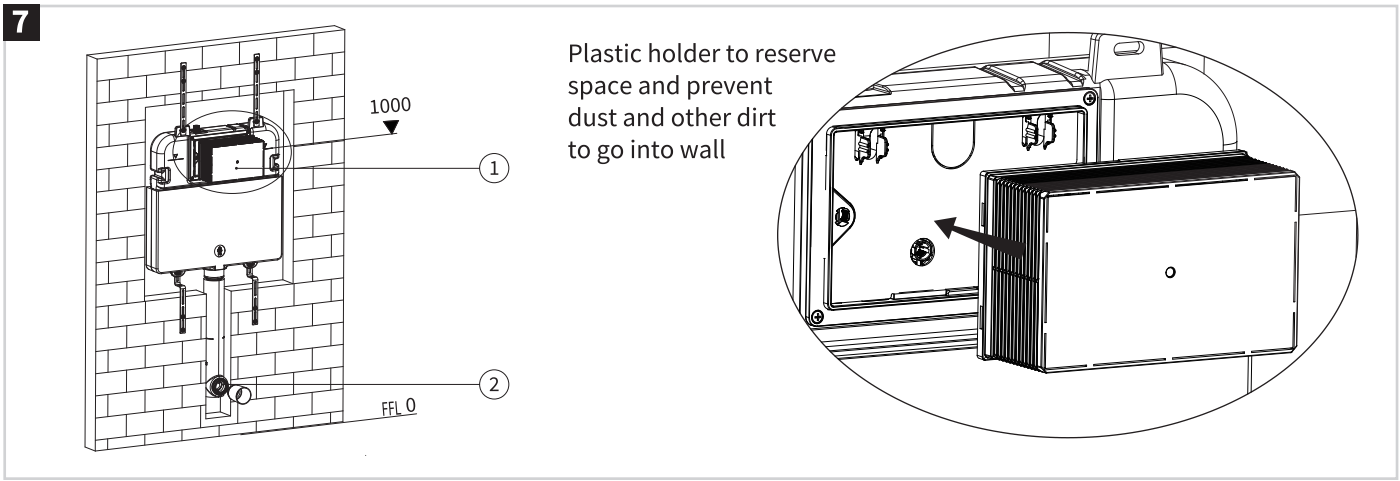

1: Plastic holder to reserve space for installation of flush plate during construction of the wall.
2: Piping stopper to reserve space for flushing piping at wall

8

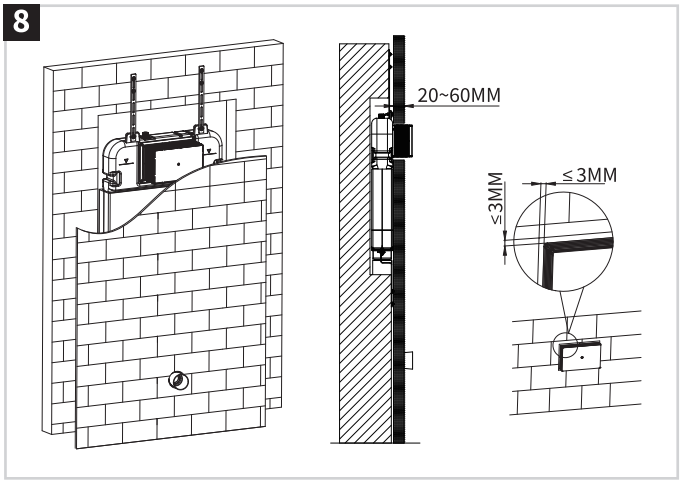

Wall thickness range 20-60mm from outer exterior of cistern foam cover to finished wall surface.

9

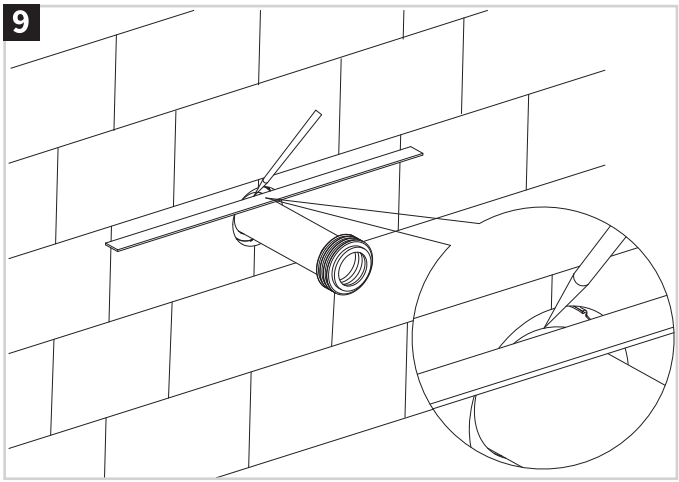

Fully unsert the flush pipe into cistern flushing outlet and draw line as pictured above.

10

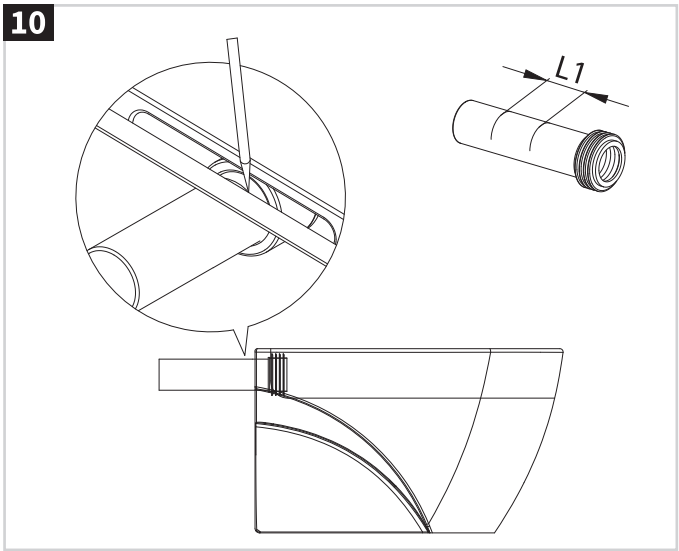

Remove flush pipe from cistern and insert into pan and draw the line.

11

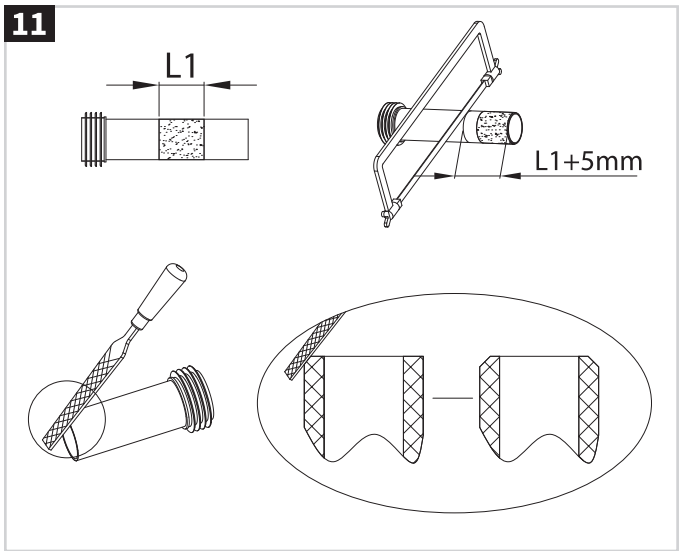

Cut length of flush pipe as required and de-burr appropriately.

INSTALLATION

12

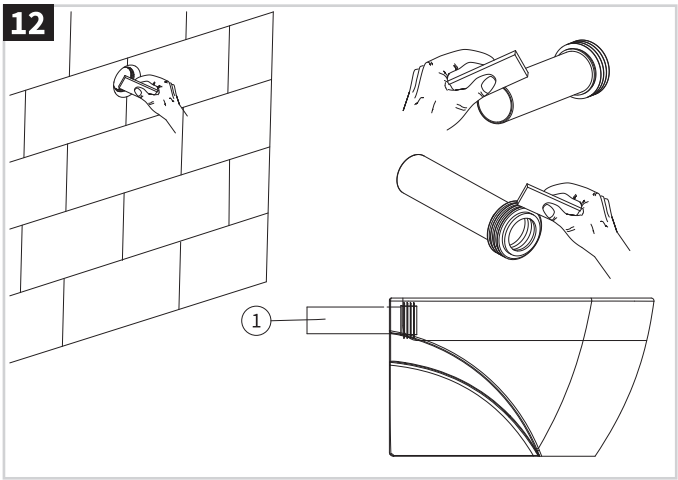

13

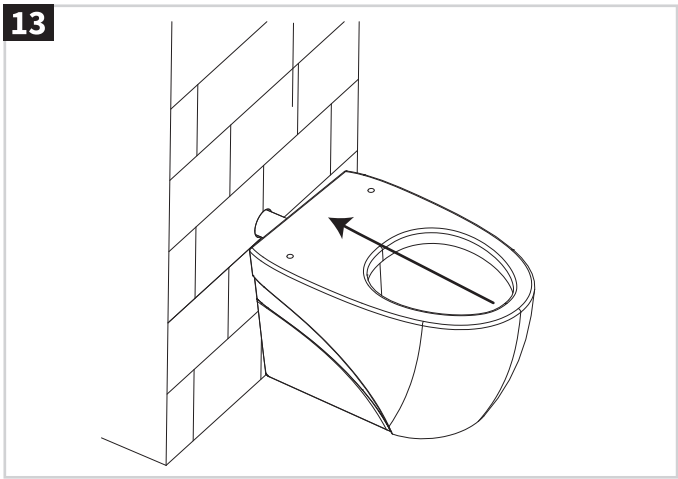

14

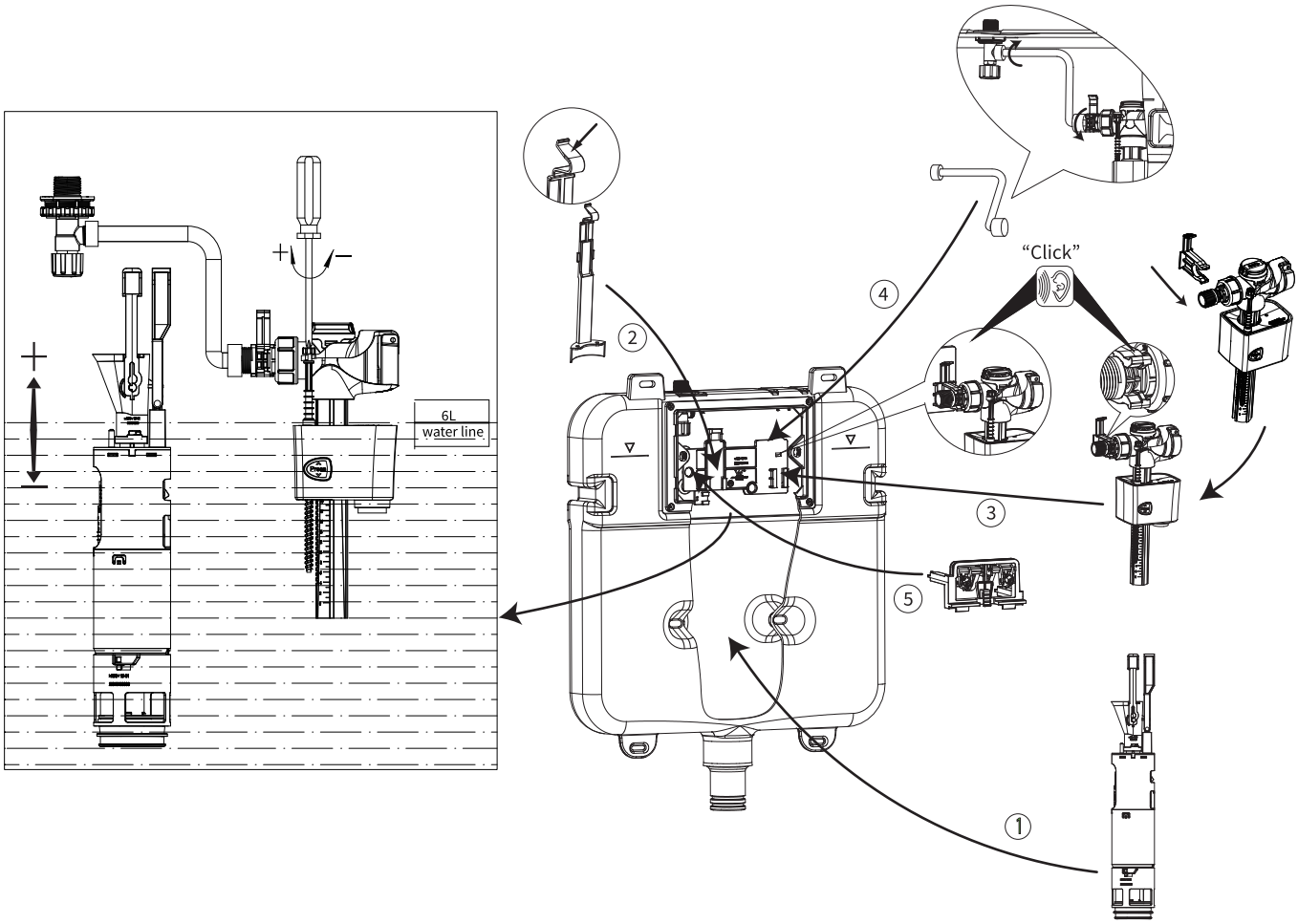

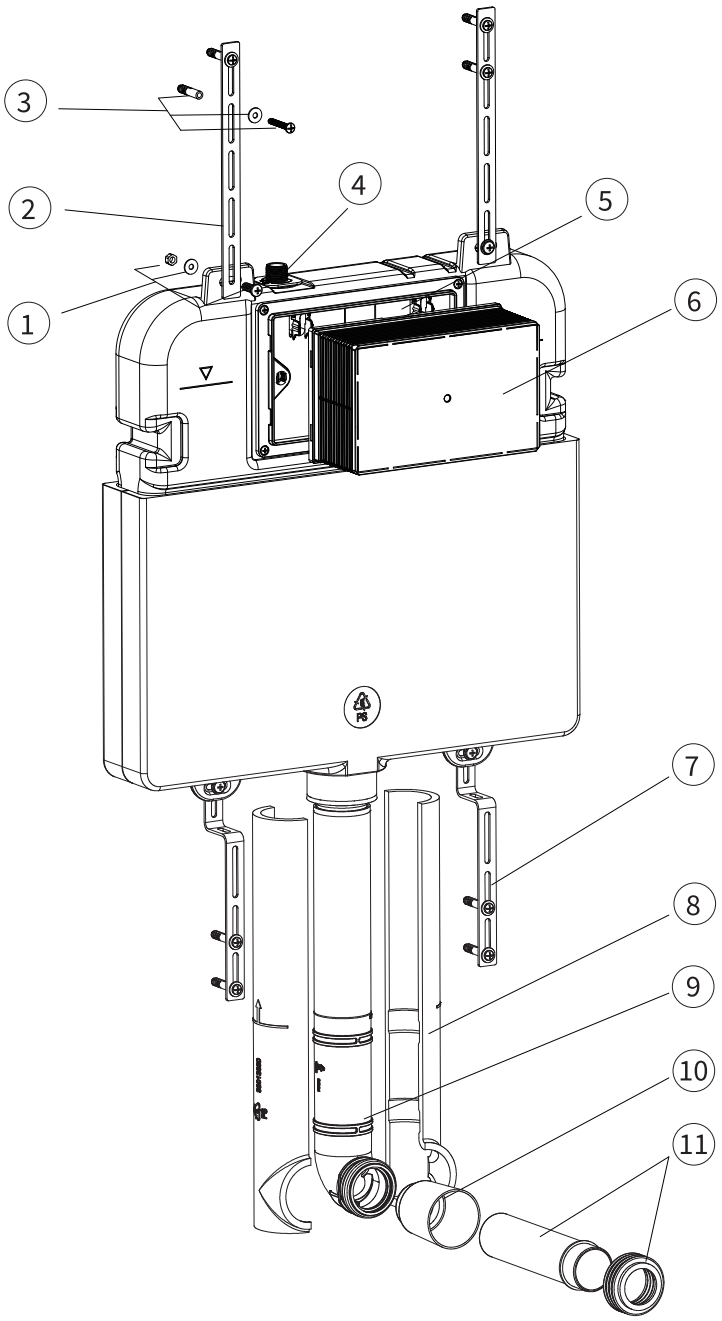

Compatible with following flush plates:

VENFLUSHC
VENFLUSHB
VENFLUSHF
VENFLUSHV
VENFLUSHT
VENFLUSHBZ
MPROFLUSHC
MPROFLUSHB
MPROFLUSHF
MPROFLUSHV
MPROFLUSHT
MPROFLUSHBZ
MPROSPLATEC
MPROSPLATEB
MPROSPLATEF
MPROSPLATEV
MPROSPLATET
MPROSPLATEBZ

BR_VENFLUSHC
BR_VENFLUSHB
BR_VENFLUSHF
BR_VENFLUSHV

BURPLATEC
BURPLATEG
BURPLATEL

List of main installation accessories

NO.	Description	Qty	Function
1	Screws	4	Straight tube.
2	Iron bracket	2	
3	Expansion screw	8	To fix straight straps and Z-shaped straps
4	Angle valve	1	Fill valve inlet and shut-off.
5	Cistern cover	1	Airproof tank and mounting of drain valve lever.
6	Plastic holder	1	To reserve space for installation of actuator at wall building.
7	Z-shaped straps	2	Straight tube.
8	Protective cover	2	To protect connecting tube.
9	Connecting tube	1	Water inlet pipe to squatting pan (cut to customer's request).
10	Piping stopper	1	To reserve space for straight tube.
11	Straight tube	1	To joint cistern into ceramic bowl (cutting in accordance with wall thickness).

CARE & MAINTENANCE

Do not use cleaning agents containing chlorine, acids or abrasive agents which could damage the surface.
Clean only with a soft cloth using a mild detergent and dry with a micro fibre cloth or similar.

BATHROOMBRANDS®
Lake View House
Rennie Drive, Dartford
Kent DA1 5FU
United Kingdom
0345 873 8840
www.crosswater.co.uk

Part of the
Bathroom Brands Group
We reserve the right to make technical modifications without prior notice.

CISTERN & FRAME

FLUSH PLATE

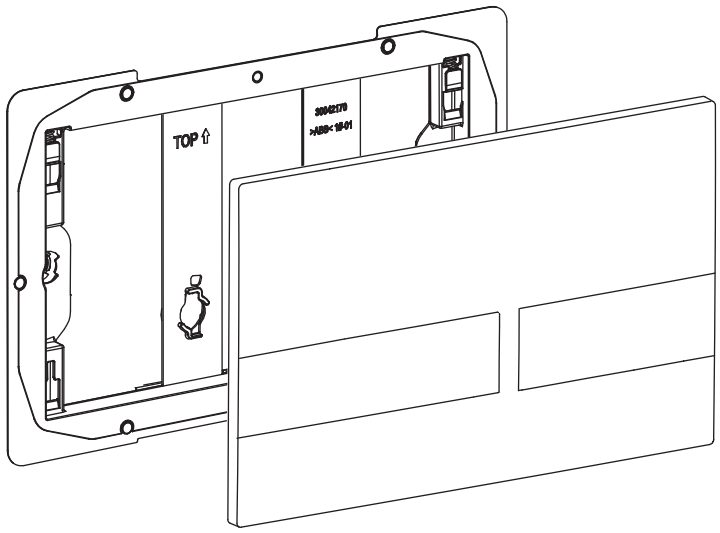

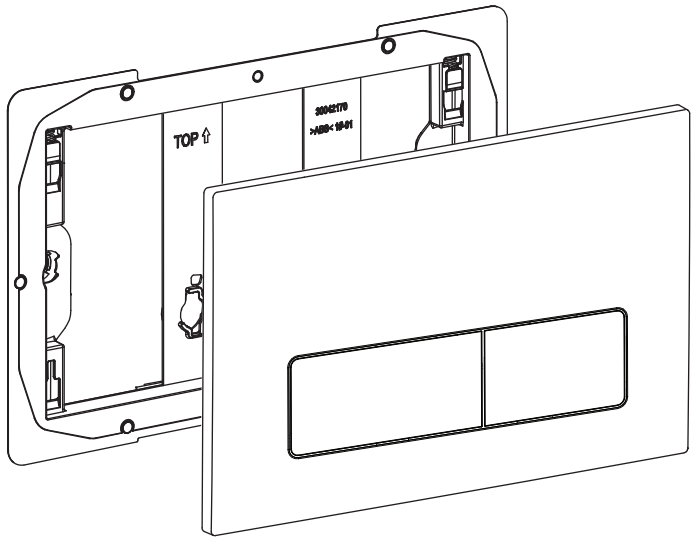

PRODUCT CODES:

VENFLUSHC
VENFLUSHB
VENFLUSHF
VENFLUSHV
VENFLUSHT
VENFLUSHBZ
MPROFLUSHC
MPROFLUSHB
MPROFLUSHF
MPROFLUSHV
MPROFLUSHT
MPROSFLUSHBZ

BR_VENFLUSHC
BR_VENFLUSHB
BR_VENFLUSHF
BR_VENFLUSHV

BEFORE YOU START

i

IMPORTANT INFORMATION BEFORE YOU START

Please read carefully and keep this information for reference. Thank you for buying a Bathroom Brands Product.
To ensure that it works to its full potential, it needs to be fitted correctly. Check the contents of the pack carefully before installation.
Bathroom Brands will not be held responsible for any re-fit costs where faulty product has been. If any fault is found with materials or workmanship, it must be reported immediately to the manufacturer. Remedial action will be taken based on information received, on condition that:

1. Full details are supplied to the manufacturer.
2. The product has not been modified or tampered with.
3. The manufacturer is informed of any damage/shortages prior to installation.
4. The product has not been installed, or attempts have been made to install.

We do not accept responsibility for any problems that may occur through incorrect installation. This product should only be installed by a suitably qualified plumber/installer.
Should the installation be completed by a non-qualified person any product guarantee maybe considered invalid.

INSTALLATION

1

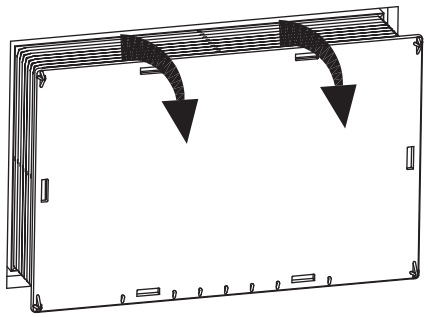

2

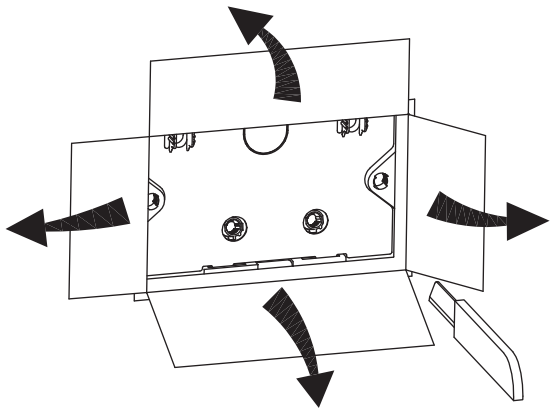

3

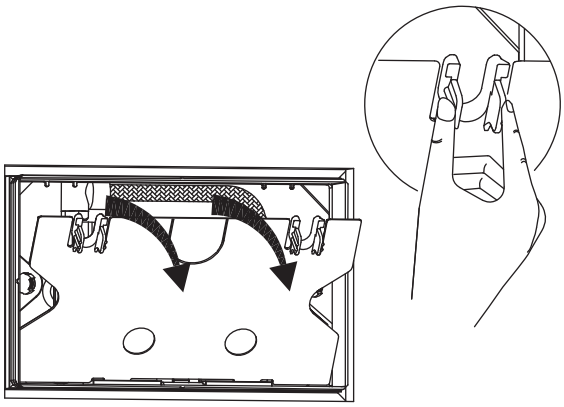

4

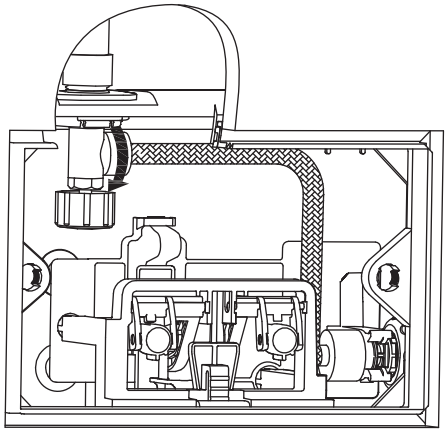

5

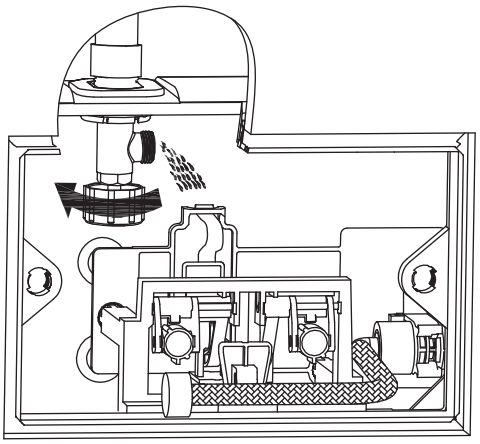

6

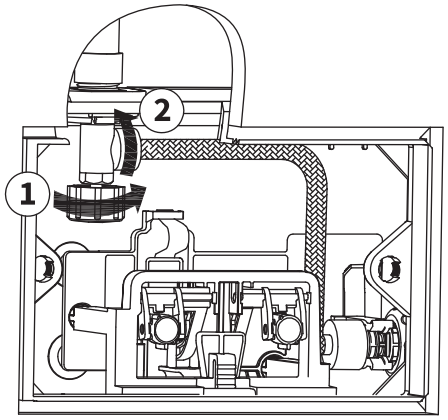

INSTALLATION

7

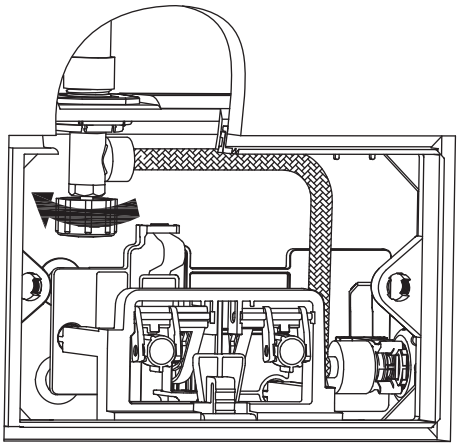

8

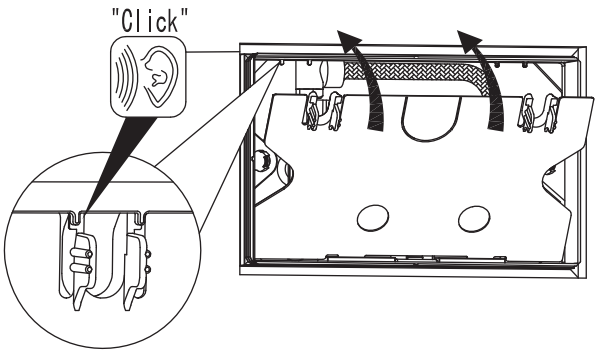

9

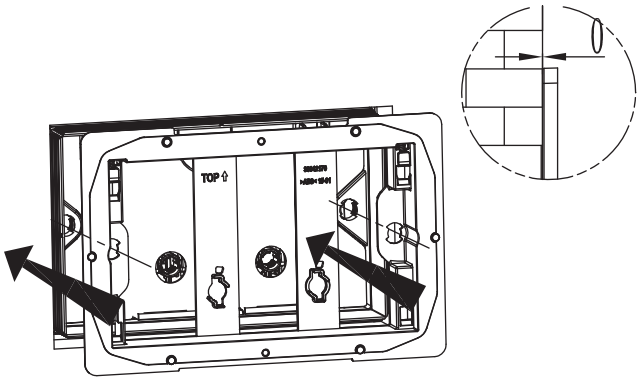

10

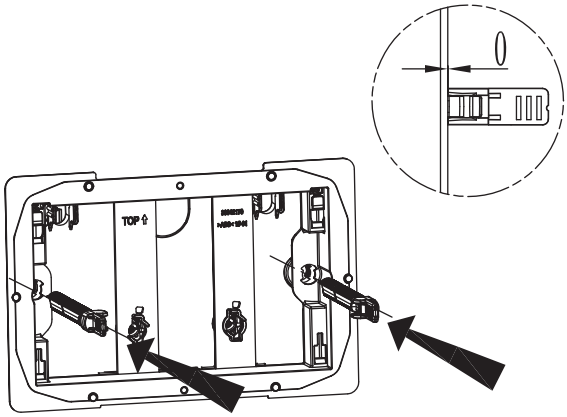

11

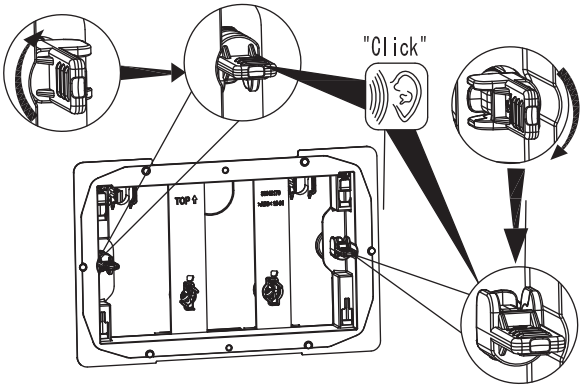

12

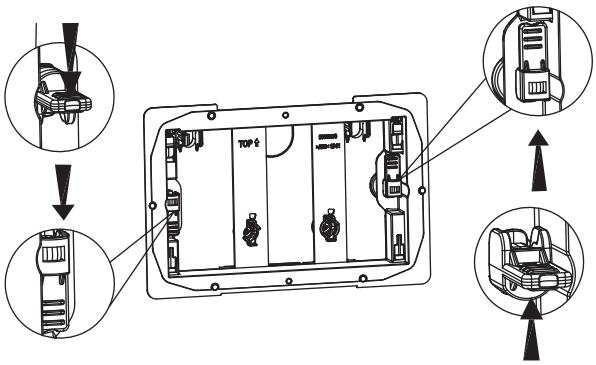

INSTALLATION

13

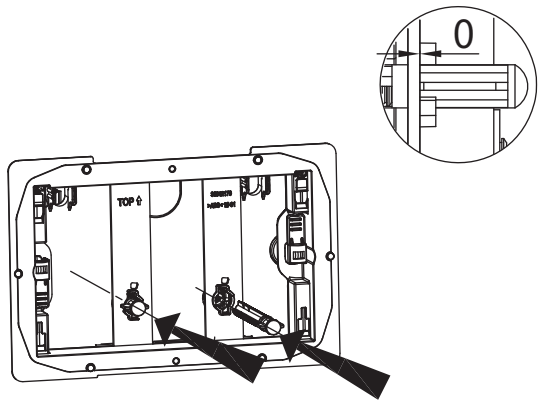

14

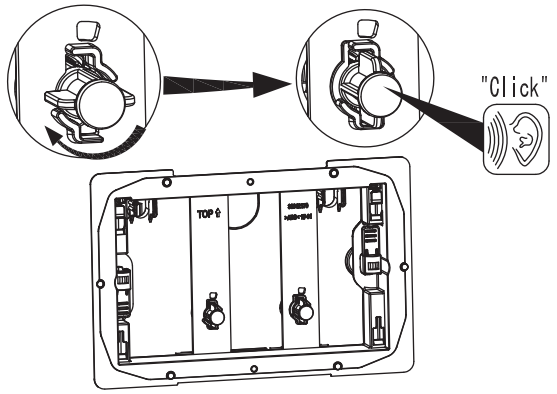

15

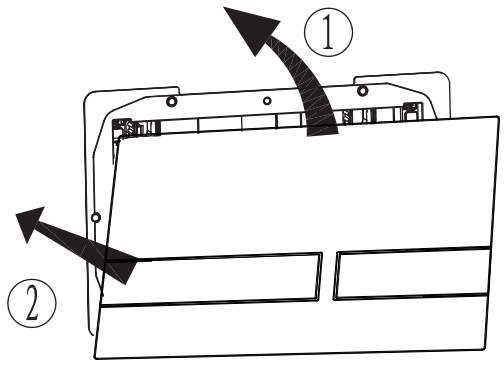

16

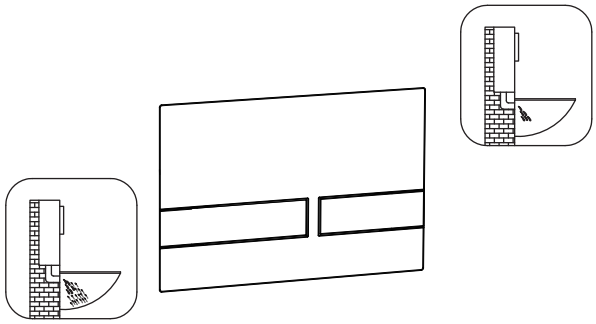

Compatible with following concealed cisterns:

WCC46X39R	BR_WCC46X39R
WCC51X51R	BR_WCC51X51R
WCF114X50R	BR_WCF114X50R
WCF114X51R	BR_WCF114X51R
WCF114X59R	BR_WCF114X59R
WCF80X45R	BR_WCF80X45R
WCF98X45R	BR_WCF98X45R

CARE & MAINTENANCE

Do not use cleaning agents containing chlorine, acids or abrasive agents which could damage the surface.
Clean only with a soft cloth using a mild detergent and dry with a micro fibre cloth or similar.

BATHROOMBRANDS®
Lake View House
Rennie Drive, Dartford
Kent DA1 5FU
United Kingdom
0345 873 8840
www.crosswater.co.uk

Part of the
Bathroom Brands Group
We reserve the right to make technical modifications without prior notice.