# TOTO®

## MH/NC SERIES

**Back-To-Wall**

**CW163Y / CW763Y**

1

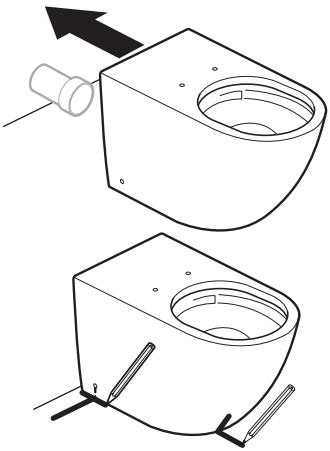

2

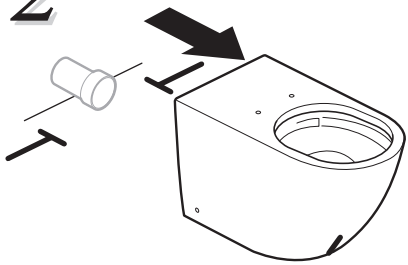

3

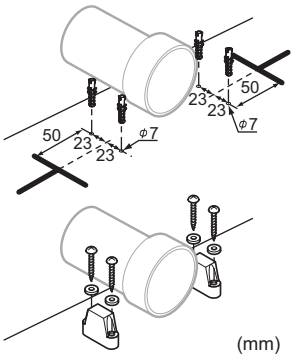


4

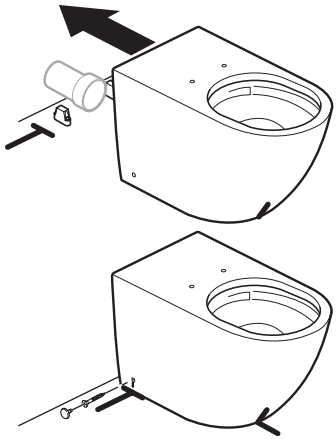
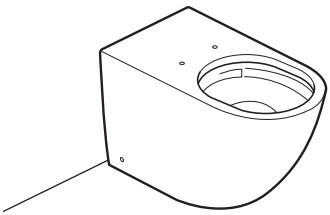
5