TOILETS

MH WC, back-to-wall

DE: MH WC, bodenstehend
FR: MH WC sur pieds
IT: MH Vaso a pavimento
NL: WC MH, back-to-wall, staand toilet

PRODUCT DETAILS	
Product code	CW163Y
GTIN (EAN)	40 50663 09035 7
Size	w:390xd:624xh:410 (mm)
Weight	35 kg
Colour	White
Material	Ceramic
Technologies	TORNADO FLUSH, CEFIONTECT, RIMLESS, Water saving, 3/4.5 - 6 L

CAN BE COMBINED WITH:	
WC seat, slim with soft-close	TC514G
MH WC seat with soft-closing	VC10047NN

Weights and measurements shown may be subject to small variations or are indicative.

TECHNICAL DRAWINGS

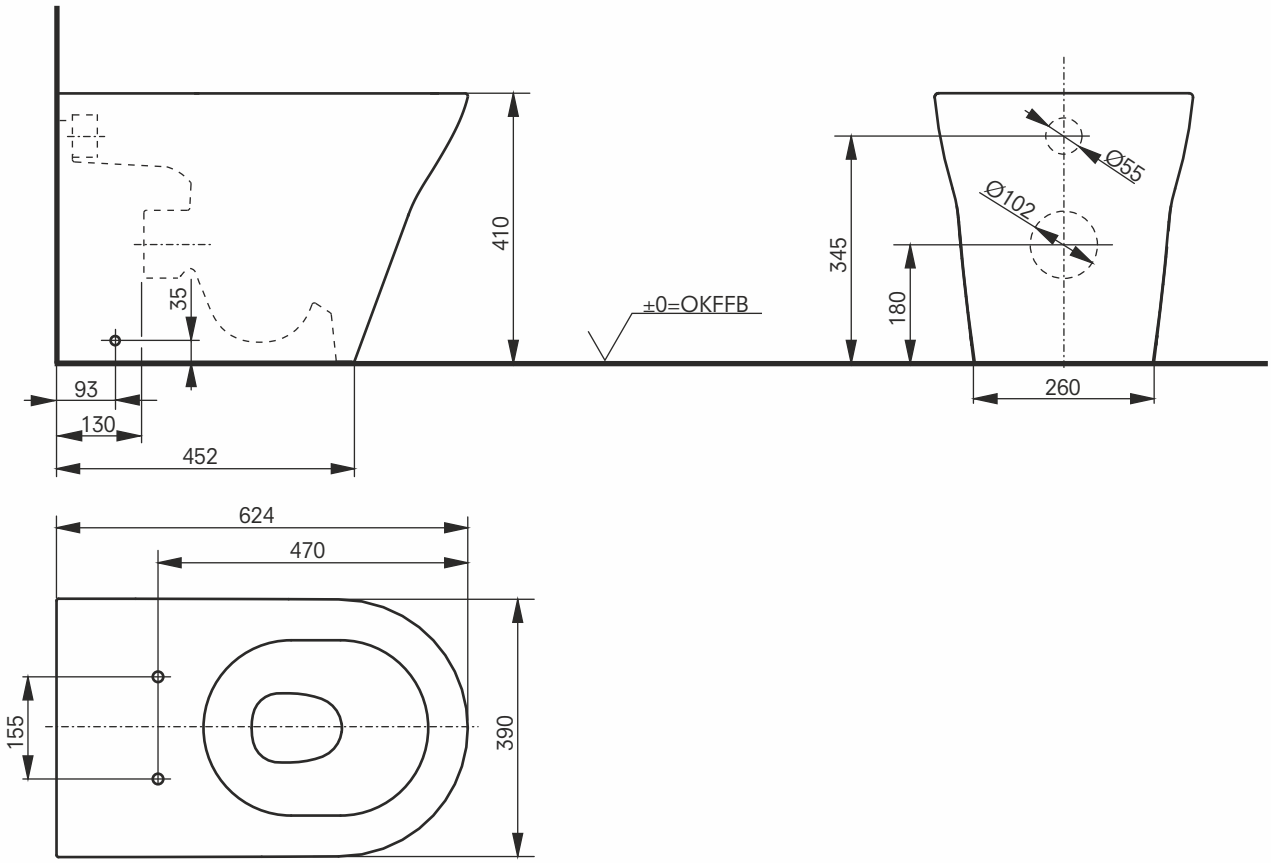

MH SERIES

WC seat

DE: WC-Sitz
FR: Abattant WC
IT: Sedile
RU: Сиденье для унитаза

PRODUCT DETAILS	
Product code	VC10047NN
EAN code	40 50663 09038 8
Size	w:398xd:477xh:59 (mm)
Weight	3.3 kg
Colour	White
Material	Urea resin

CAN BE COMBINED WITH:	
MH WC, close coupled	CW161Y
MH WC, wallhung	CW162Y
MH WC, back-to-wall	CW163Y

Weights and measurements shown may be subject to small variations or are indicative.
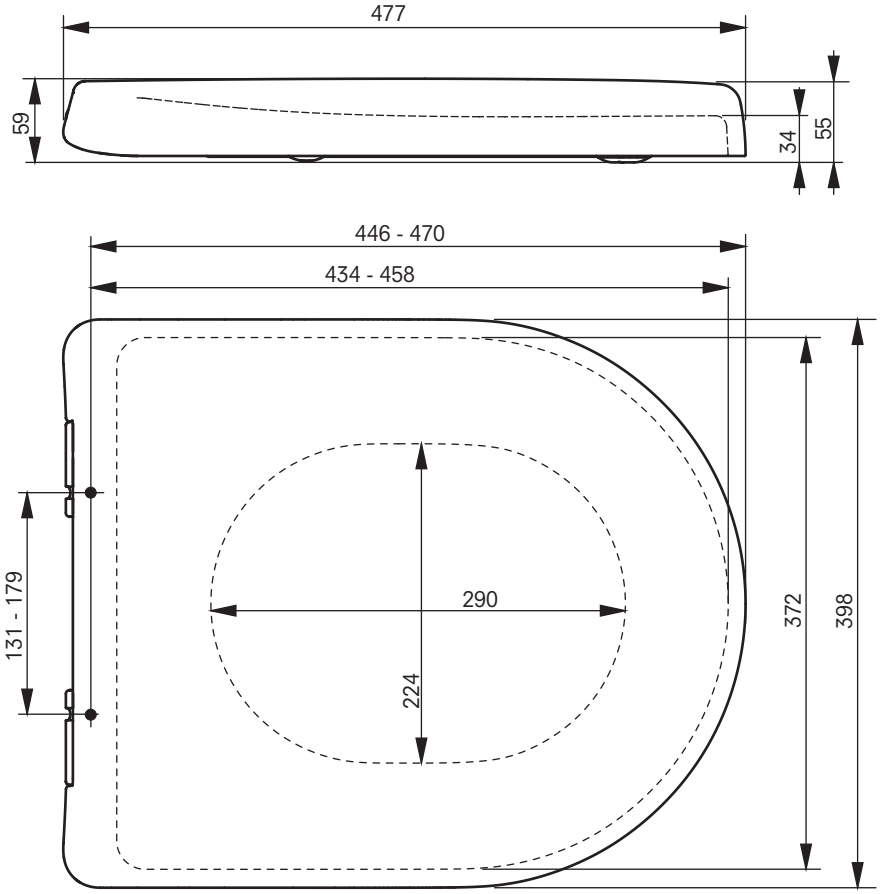
TECHNICAL DRAWINGS