NC SERIES

WC, back-to-wall

DE: WC, bodenstehend
FR: WC sur pieds
IT: Vaso a pavimento
RU: Унитаз напольный

PRODUCT DETAILS	
Product code	CW763Y
GTIN (EAN)	40 50663 09293 1
Size	w:380xd:630xh:483 (mm)
Weight	37 kg
Colour	White
Material	Ceramic
Technologies	Tornado Flush, CeFiONtect, Rimless Design, Water saving, 3/6 Liter

CAN BE COMBINED WITH:	
NC WC seat with soft-closing	VC100N
WC seat, slim with soft-close	TC514G
WASHLET™ RG Lite, with side connections, incl. Remote controller	TCF34120GEU TCF34120GGB (UK)

Weights and measurements shown may be subject to small variations or are indicative.

TECHNICAL DRAWINGS

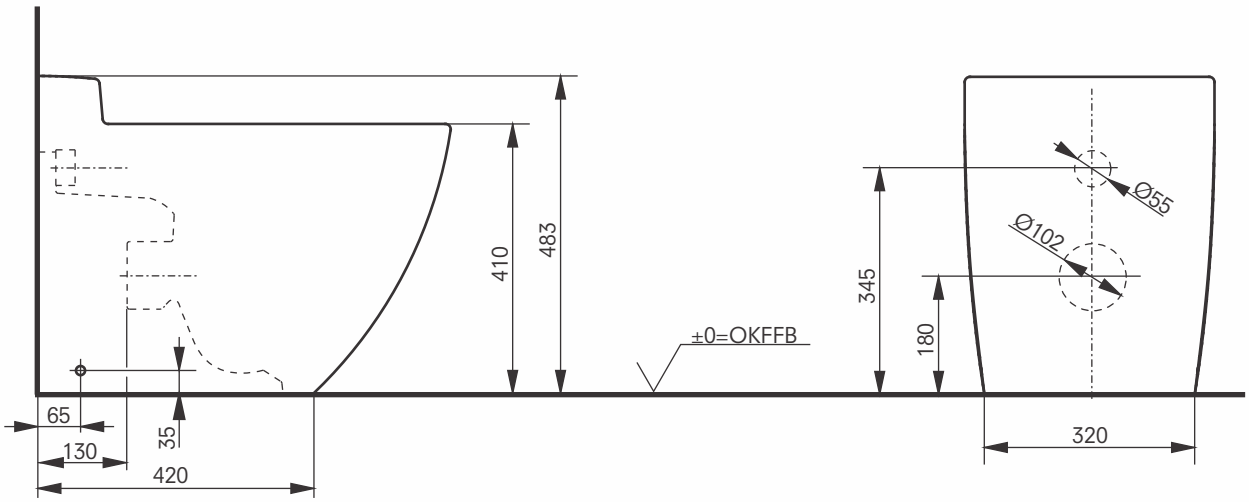

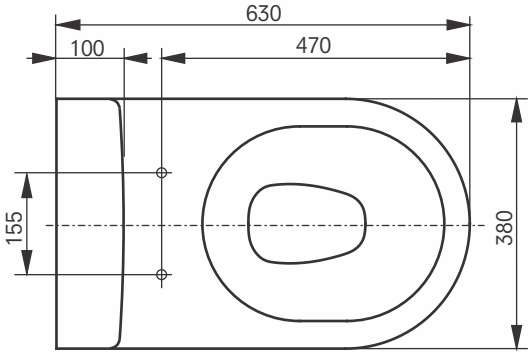

NC SERIES

WC seat

DE: WC-Sitz
FR: Abattant WC
IT: Sedile
RU: Сиденье для унитаза

PRODUCT DETAILS	
Product code	VC100N
GTIN(EAN)	40 50663 00107 0
Size	w:386xd:471xh:60 (mm)
Weight	3.3 kg
Colour	White
Material	Urea resin
Technology	Soft closing

PRODUCT DETAILS	
Product code	VC100U10R
EAN code	40 50663 0987 3
Size	w:386xd:471xh:60 (mm)
Weight	3.3 kg
Colour	White
Material	Urea resin

CAN BE COMBINED WITH	
NC WC, wallhung	CW762Y
NC WC, back-to-wall	CW763Y
RP WC, wall-hung	CW552RY

Weights and measurements shown may be subject to small variations or are indicative.
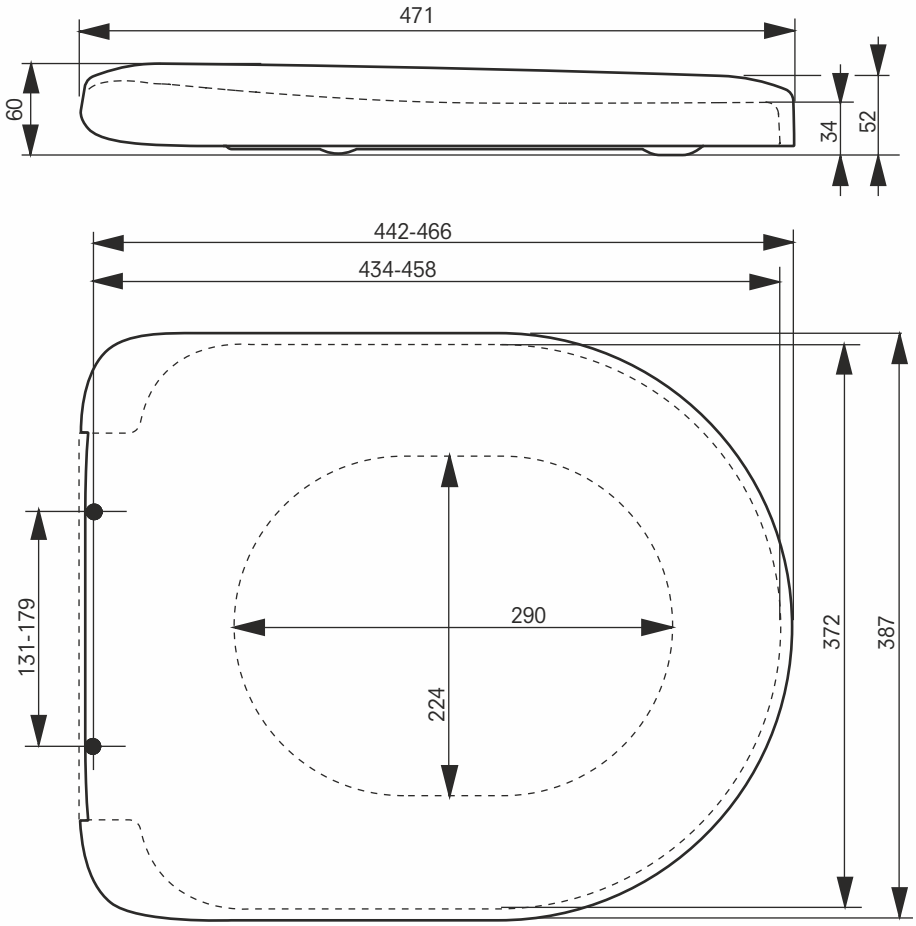
TECHNICAL DRAWINGS