PRODUCT DATA SHEET

crosswater

PRODUCT CODE

LM4000WHDSTAN

RANGE

Limit

DESCRIPTION

Limit 400mm Cloakroom Wall Hung Door Unit Steelwood

CATEGORY	Furniture
WARRANTY DETAILS	10 Years
COLOUR	Steelwood
FINISH APPLICATION	Melamine
PRIMARY MATERIAL	MFC
SECONDARY MATERIAL	MDF
INSTALL TYPE	Wall Mounted
PRODUCT WIDTH MM	395
PRODUCT HEIGHT MM	600
PRODUCT DEPTH MM	218
PRODUCT NET WEIGHT KG	9.5
STANDARDS	No

COLOUR CODE / REFERENCE	H3190 ST19
DRAWER BOX	0
DRAWER RUNNERS	0
WALL HANGERS	Yes
ADJUSTABLE FEET	No
DRAWER OPERATION	No

TECHNICAL DIMENSIONS

Dimensions in mm unless otherwise specified.

Tolerances (per material type) apply.

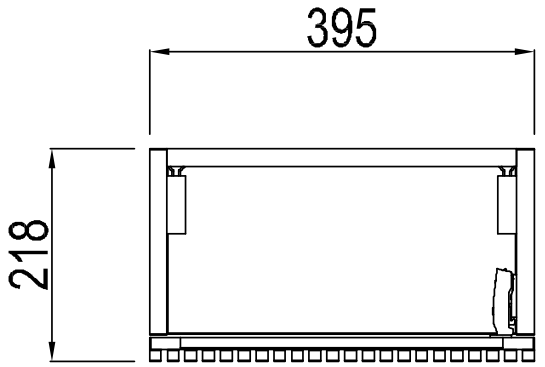

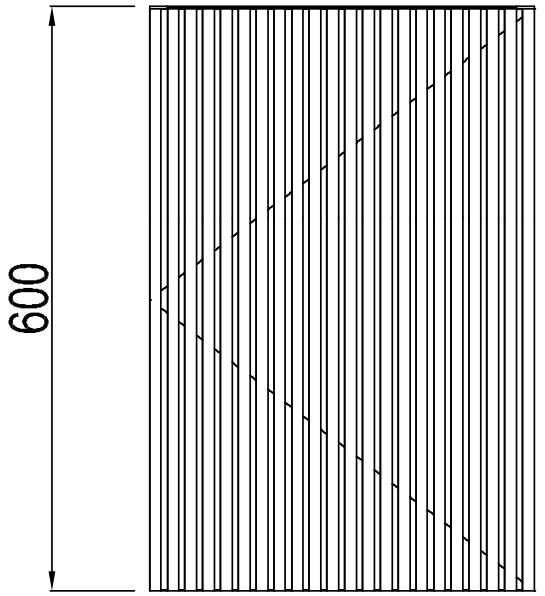

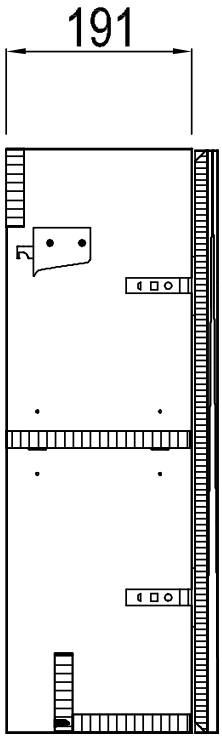

crosswater

SPARES LIST

Only the parts labelled are available as spares.

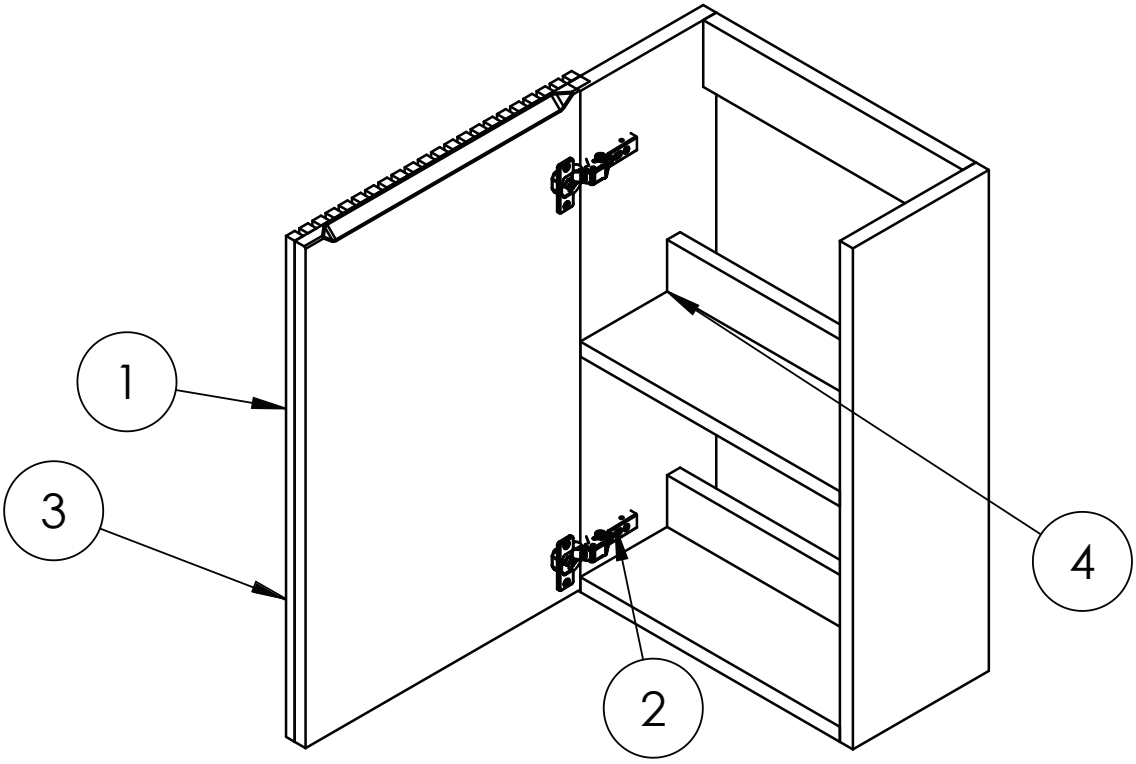

NUMBER	PART CODE	DESCRIPTION
1	DF_LM4000WHDSTAN	Limit 400mm WH Cloakroom Door Front Steelwood
	DF_LM4000WHDMOAN	Limit 400mm WH Cloakroom Door Front Modern Oak
	DF_LM4000WHDRWAN	Limit 400mm WH Cloakroom Door Front Royal Walnut
	DF_LM4000WHDWSAN	Limit 400mm WH Cloakroom Door Front Warm Stone
2	LIMITHINGE	Limit Door Hinges
3	LIMITPUSHOPEN	Limit Push to Open Mechanism
4	LIMITPINS	Limit Shelf Pins

PRODUCT DATA SHEET

crosswater

PRODUCT CODE
AL0401URW

RANGE
Alo

DESCRIPTION
Alo Basin 400x220mm Gloss White

WEBSITE LINK Click Here

CATEGORY	Sanitaryware
WARRANTY DETAILS	Lifetime
COLOUR	Gloss White
FINISH APPLICATION	Gelcoat/Nanocoat
PRIMARY MATERIAL	Stone Resin
INSTALL TYPE	Furniture Mounted
PRODUCT WIDTH MM	400
PRODUCT HEIGHT MM	109
PRODUCT DEPTH MM	300
PRODUCT NET WEIGHT KG	3.8
STANDARDS	EN 14688

TAP HOLES	1TH
FIXINGS INCLUDED	No
OVERFLOW	No
BASIN WASTE SIZE	44mm
CAPACITY 1L - WATER AT OVERFLOW LEVEL BASIN	3.4

TECHNICAL DIMENSIONS

Dimensions in mm unless otherwise specified.

Tolerances (per material type) apply.

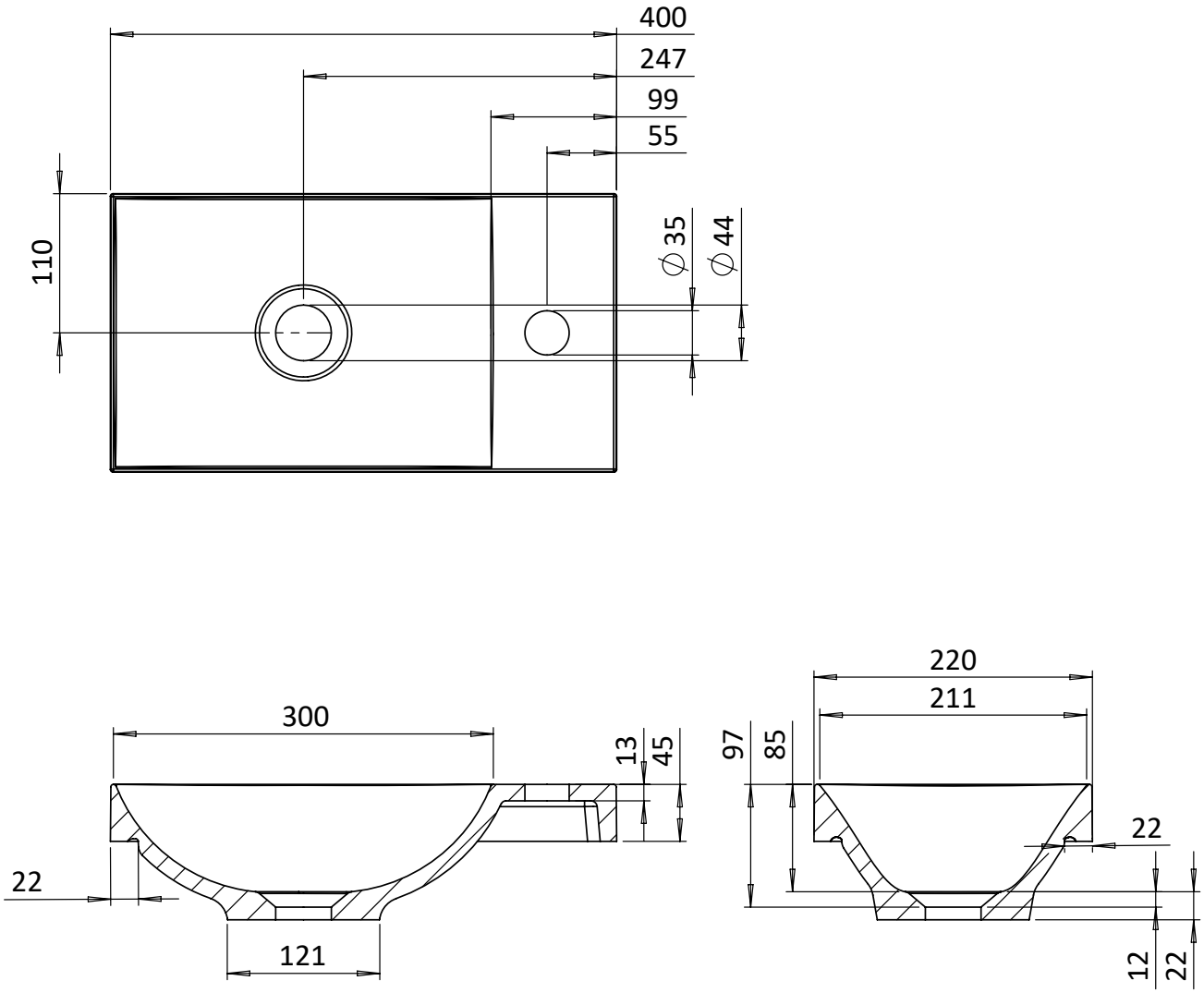

crosswater

SPARES LIST

Only the parts labelled are available as spares.

NO SPARES AVAILABLE