Eastbrook Road, Gloucester GL4 3DB
Technical Helpline: 01452 317890
email: technical@eastbrookco.com

Volente & Stone Resin Trays

Installation Instructions

Parts Supplied

Ref	Description	**Illustration** (Shape of tray may vary from illustration)	Qty
A	Shower Tray	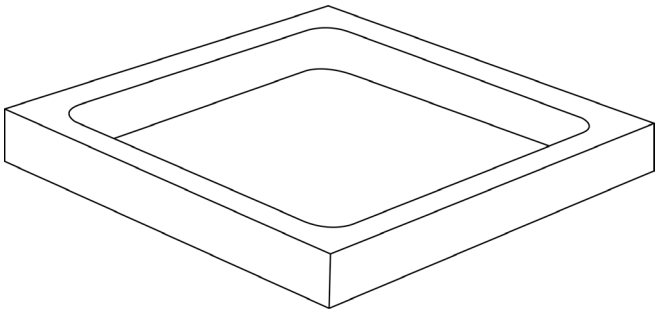	1

Before You Start:

- Please note that although these instructions are comprehensive we always recommend that a technically competent installer undertakes the installation.
- For raised installations please use Universal Panel and Easy Plumb Kit.
- **WARNING! Your shower tray may be heavy and to avoid injury should always be considered a two person lift.**
- **Caution:** Care should be taken when drilling into walls or floors to avoid hidden pipes or electrical cables.
- When handling your shower tray take care not to damage the bottom edges and when installing take particular care to protect the visible surfaces from impact damage or abrasions.
- Check that the shower tray is the colour, size, shape and type you require.
- Unpack and check for any damage. Do not install if not satisfied and contact your local supplier.
- Check that the top surface of the shower tray is compatible with your intended shower enclosure, taking into account the reduced area that will result after tiles etc have been fitted. This is very important if using a shower tray with a tiling upstand.
- If you install this shower tray in conjunction with a steam unit, you must ensure that the steam outlet is a minimum of 350mm from the top of the tray.
- When considering your installation method, you should be able to attach or repair your waste or waste outlet in situ.

Tools and Materials Required (not supplied)

- Drill
- Drill bit to suit floor screws
- Hole Cutter, size to suit the waste outlet with bottle trap used
- Jigsaw
- Pencil
- Spirit Level
- Trowel
- Cement
- Cement additive, for anti crumbling, to mix as instructed by manufacturer
- Fine Sand
- Floor screws, suitable to fix marine plywood board to floor
- Marine Plywood board (18mm thick minimum)
- Masking Tape
- Plumbing pipe and fittings as necessary
- Silicone sealant
- Standard Shower Waste (which includes bottle trap), or similar

1 With the shower tray (A) in position mark the perimeter and waste hole on the floor including an area out side the perimeter for access to connect plumbing after the tray has been installed (See Fig 1). If using a shower tray with a tiling upstand allowance must be made for recessing the tray into adjacent walls to allow tiling down onto the tray surface (See Fig 1a).

2 Form a trench in the floor to hold the waste pipe and shower waste and extend to include the access area (See Fig 1).

3 Install in accordance with plumbing regulations the waste pipe and shower waste (protecting any exposed threads with masking tape) in the trench, then blank off the trench so it remains clear (to enable plumbing connection) after laying a cement bed on the area to support the tray.

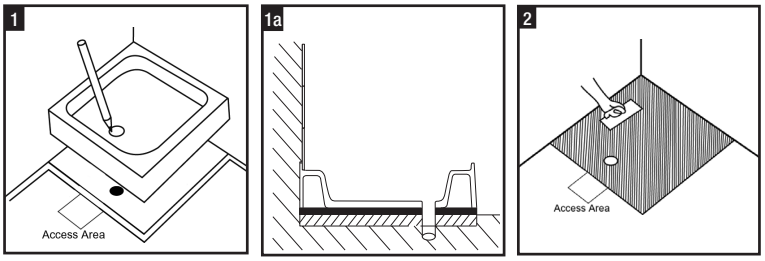

Note! **Some shower trays have a protective film (indicated by a label on the surface) which must now be removed, undertake a final inspection of the tray at this stage.**

4 If fitting the optional Versatile Seal Strip (Flat Top Trays only) follow the instructions supplied with the seal strip and attach the strip now. Before proceeding dry fit all items in situ to ensure compatability and screw the plywood into position.

5 Mix fine sand, cement in accordance with the manufacturers instructions to a workable mix to cover the total area under the tray. Trowel to a thickness suitable to allow levelling and full support of the shower tray (See Fig 2).

Note! Silicone sealants, foams, mastics, installation compound adhesive* or similar **MUST NOT** be used as a substitute for cement.

* Except when used with the Universal Panel and Easy Plumb Kit.

6 Place the shower tray (A) onto the wet cement and ensure it is fully supported by the mix. Level the top rims only as the shower tray has a built in fall for adequate drainage (See Fig 3).

7 When the cement has set, remove any excess mix and masking tape then make connection between the shower tray and the waste pipe. The shower tray and all connections **MUST** now be checked for water tightness flow and adequate drainage over the entire area.

8 After all checks and adjustments, seal along the tiling line with silicone sealant (See Fig 4).

Note! **When fitting a shower enclosure refer to the manufacturers installation instructions**

9 Fill in the access area and the waste pipe trench beneath the shower tray (A) with cement to give full support to the shower tray in service.

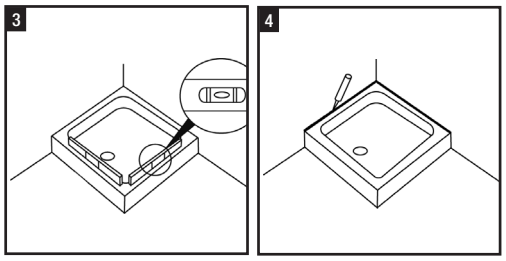

Installation on Suspended Floors

1 Place shower tray (A) in position, mark the perimeter on the floor including an area outside the perimeter for access to connect plumbing after the tray has been installed (See Fig 5). If using a shower tray with a tiling upstand allowance must be made for recessing the tray into adjacent walls to allow tiling onto the tray surface (See Fig 1a page 2).

2 The floor area (or larger) covered by the shower tray (A) must be removed and replaced with a single piece of plywood (min 18mm thick) and also access for the waste should be constructed.

3 Put the plywood in position, place the shower tray (A) on the plywood and mark the waste hole location (See Fig 5).

4 Remove the shower tray (A), then use the hole cutter to drill a hole in the plywood large enough for the entire shower waste being used, which may need to be extended with the jigsaw to form a keyhole shaped cut-out for some types of shower waste. Keep all holes to the minimum (See Fig 6).

5 Remove the plywood and install the waste outlet pipe in accordance with building regulation.

Note! **Some shower trays have a protective film (indicated by a label on the surface) which must now be removed, undertake a final inspection of the tray at this stage.**

6 If fitting the optional Versatile Seal Strip, (Flat top shower trays only) follow the instructions supplied with the seal strip and attach the strip now.

7 Fit the shower waste to the shower tray (A) following the instructions supplied and protect exposed threads with masking tape. Before proceeding dry fit all items in situ to ensure compatibility and screw the plywood into position.

8 Mix fine sand, cement in accordance with the manufacturers instructions to a workable mix to cover the total area under the tray. Trowel to a thickness suitable to allow levelling and full support of the shower tray (A) (See Fig 2 page 2).

Note! **Silicone sealants, foams, mastics, installation compound adhesive* or similar MUST NOT be used to substitute for cement.**

*** Except when used with the Universal Panel and Easy Plumb Kit.**

9 Place the shower tray (A) onto the wet cement and ensure it is fully supported by the mix. Level the top rims only as the shower tray has a built in fall for adequate drainage (See Fig 3 page 2).

10 When the cement has set, remove any excess mix and masking tape then make connection between the shower tray and the waste pipe. The shower tray (A) and all connections **MUST** now be checked for water tightness flow and adequate drainage over the entire area.

11 After all checks and adjustments, seal along the tiling line with silicone sealant (See Fig 4 page 2).

Note! **When fitting a shower enclosure refer to the manufacturers installation instructions**

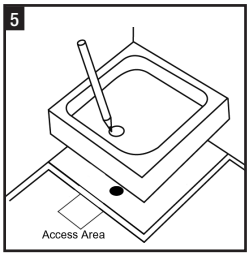

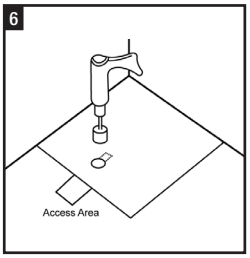

Care & Use of Your Shower Tray

Water feeds where possible should not be connected to a water softener system as salts used with some types of units may discolour the surface.

It is normal for small amounts of localized water to be retained in the shower tray after use which should be wiped dry immediately to prevent build up of mineral sediments.

The shower tray should be cleaned with warm, soapy water only. Do not use scourers, abrasives or chemical cleaners.

Troubleshooting

Q The shower waste in the shower tray is directly over an obstruction at floor level.
A Consider switching to the use of a universal panel and easy plumb kit or re-locating shower tray.

Q The shower waste will not fit through the plywood and connect with the pipe run.
A Cut a slightly larger hole with a key hole section over the connection point.

Q There is water retaining in the base of tray.
A Check that the tray is level (top rims) as it is normal for small amounts of localized water to be retained.

Eastbrook

Eastbrook Road, Gloucester GL4 3DB
Technical Helpline: 01452 317890
email: technical@eastbrookco.com

90mm Shower Tray Waste Installation and Assembly Instructions

1. Remove upper assembly and seals from the bottom trap.
2. Re-assemble on to the Shower Tray as shown in diagram below. NB: The upper seal fitting is optional.
3. To clean the trap, remove the dome then twist and remove the inner section (not shown). Wipe clean, re-assemble and fit.
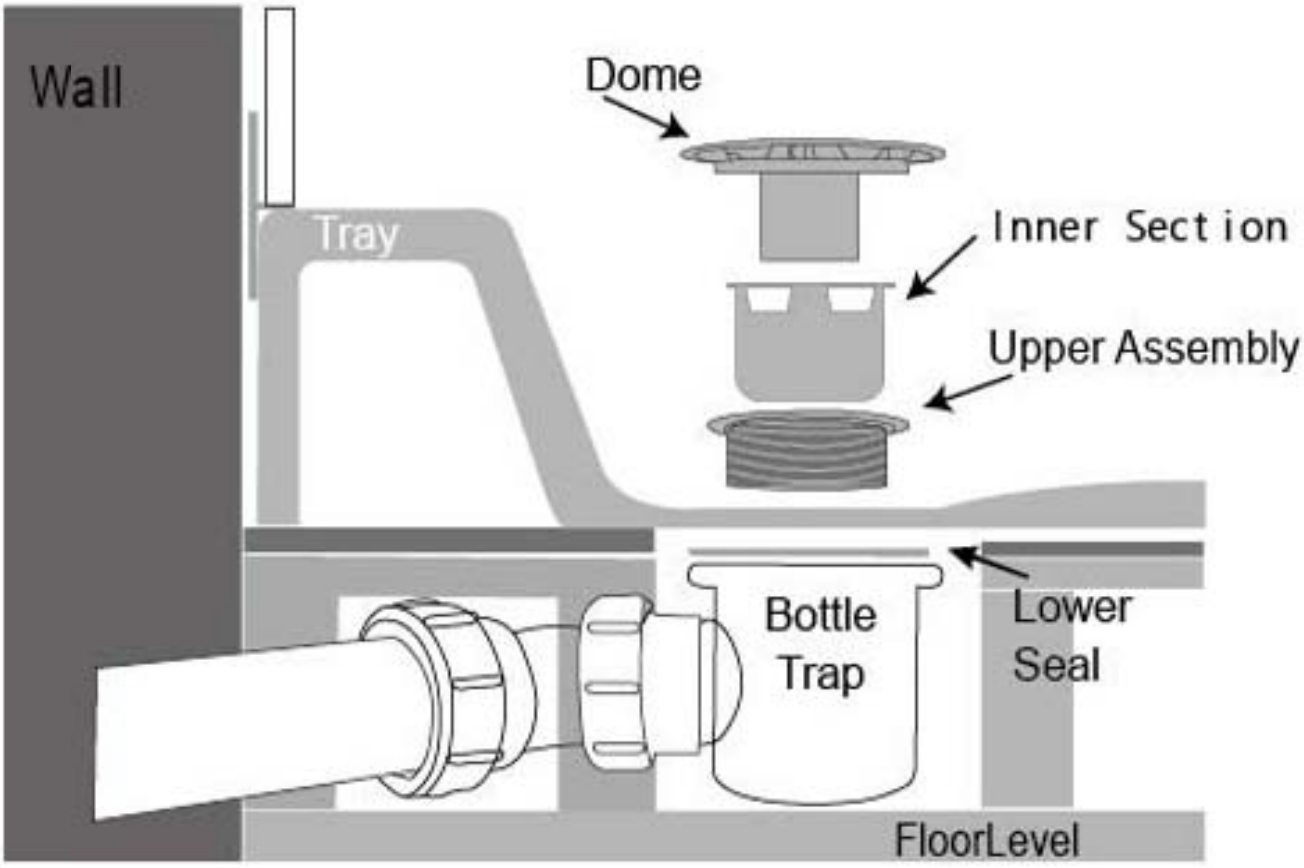
NB: A suitable quality silicone sealant should be used on all surfaces againt the Shower Tray.