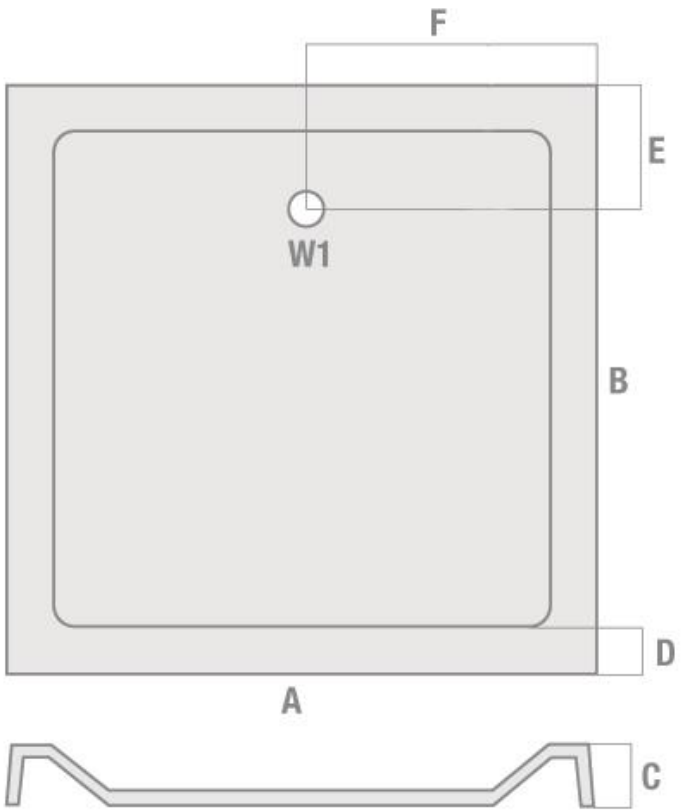

Eastbrook Road, Gloucester GL4 3DB
Technical Helpline: 01452 317890
email: technical@eastbrookco.com

Size mm	Code	Finish	Waste Position	Waste Size	A	B	C	D	E	F
700 x 700	K1A	ABS	W1	90	700	700	40	65	190	350
760 x 760	K1B	ABS	W1	90	760	760	40	65	190	380
800 x 800	K1C	ABS	W1	90	800	800	40	65	190	400
900 x 900	K1D	ABS	W1	90	900	900	40	65	190	450
1000 x 1000	K1E	ABS	W1	90	1000	1000	40	65	190	500
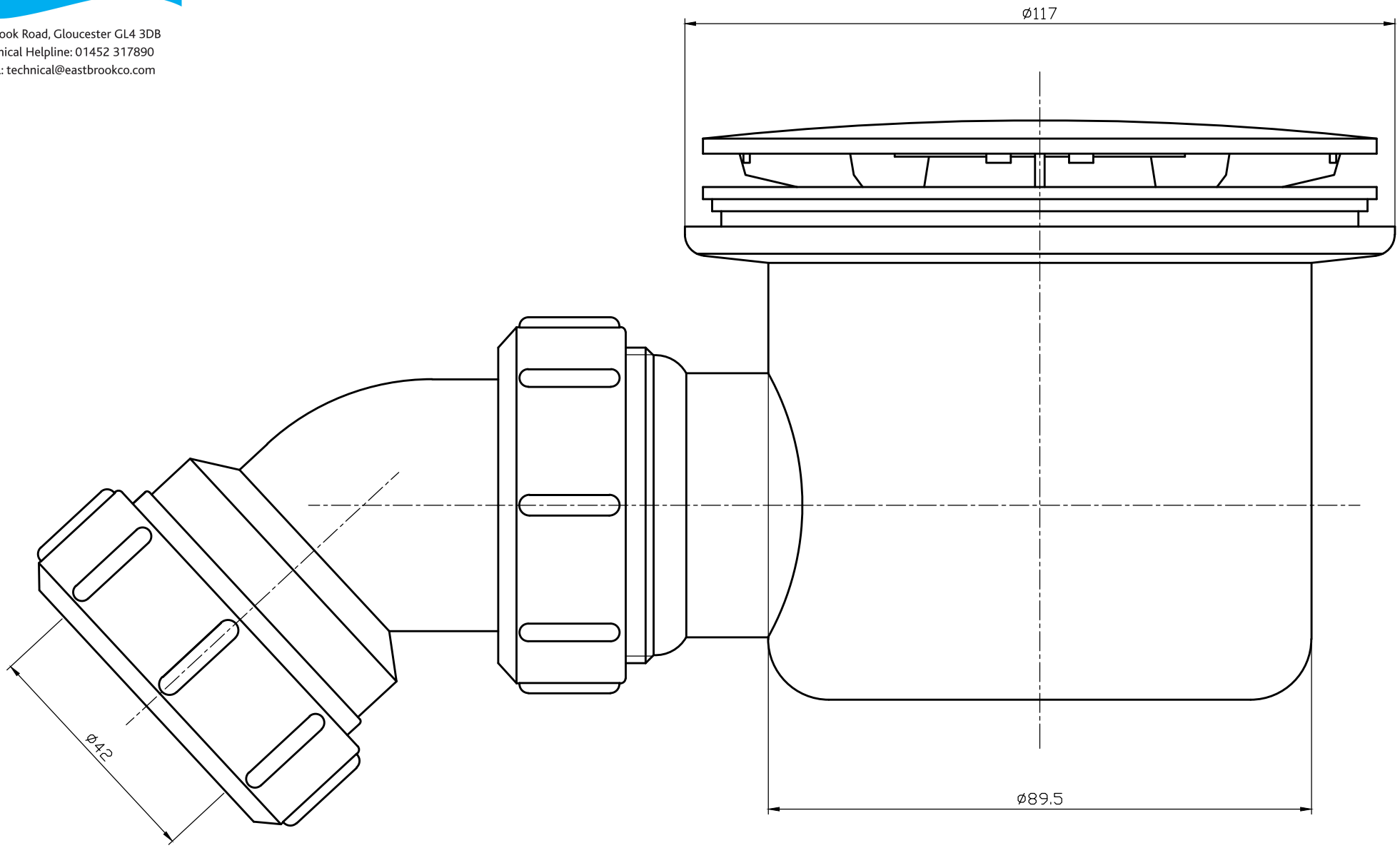
Eastbrook Road, Gloucester GL4 3DB
Technical Helpline: 01452 317890
email: technical@eastbrookco.com