PRODUCT DATA SHEET

Burlington®

PRODUCT CODE

GU6057VW_CAB

RANGE

Guild

DESCRIPTION

Guild Mirror Cabinet 650mm Varley White

CATEGORY	Cabinets & Mirrors
WARRANTY DETAILS	5 Years
COLOUR	Varley White
FINISH APPLICATION	Lacquered
PRIMARY MATERIAL	MDF
SECONDARY MATERIAL	Glass
INSTALL TYPE	Wall Mounted
PRODUCT WIDTH MM	650
PRODUCT HEIGHT MM	572
PRODUCT DEPTH MM	175
PRODUCT NET WEIGHT KG	14.8
STANDARDS	EN14749:2016

NUMBER OF DOORS	2

Burlington®

TECHNICAL DIMENSIONS

Dimensions in mm unless otherwise specified.

Tolerances (per material type) apply.

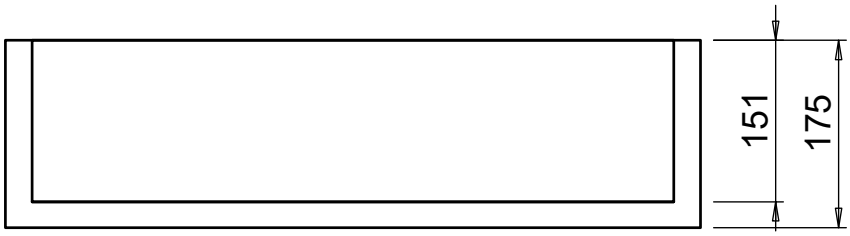

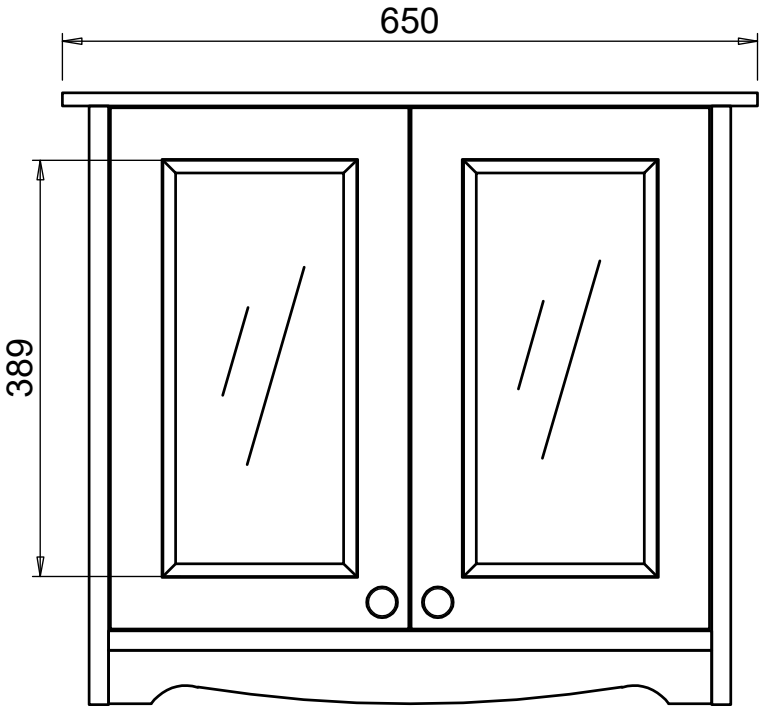

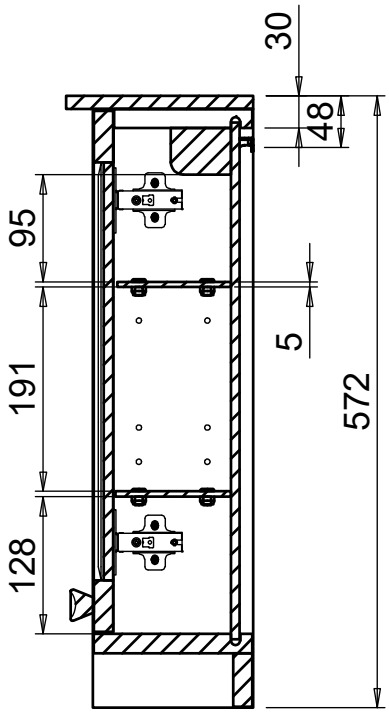

Burlington®

SPARES LIST

Only the parts labelled are available as spares.

SPARES AVAILABLE UPON REQUEST