SPECIFICATION SHEET

COLLECTION: CAMEO
PRODUCT CODE: CAM-140-SBR

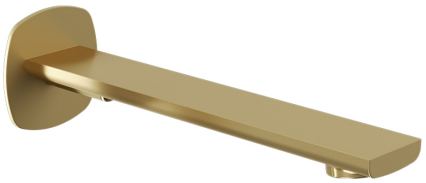

TAP TYPE
Bath Spout

PLUMBING SYSTEM SUITABILITY
Combination Boiler

MOUNTING
Wall Mounted

HOLES
1 Hole

STYLE
Square

WALL HOLE DRILL DIAMETER
25-55mm

CONNECTIONS / FITTINGS
1/2" x 10mm male threaded connection

COLLECTION NAME
Cameo

FINISH
Satin Brass

tel: 01934 744466
email: sales@vado.com
www.vado.com

WHERE INSPIRATION FLOWS
TAPS | SHOWERS | ACCESSORIES

VADO

SPECIFICATION SHEET

COLLECTION: CAMEO
PRODUCT CODE: CAM-140-SBR

MINIMUM OPERATING PRESSURE

1.0 Bar MP

GUARANTEE

10 Year Guarantee

tel: 01934 744466
email: sales@vado.com
www.vado.com

WHERE INSPIRATION FLOWS
TAPS | SHOWERS | ACCESSORIES
VADO

TECHNICAL DRAWING

COLLECTION: CAMEO
PRODUCT CODE: CAM-140-SBR

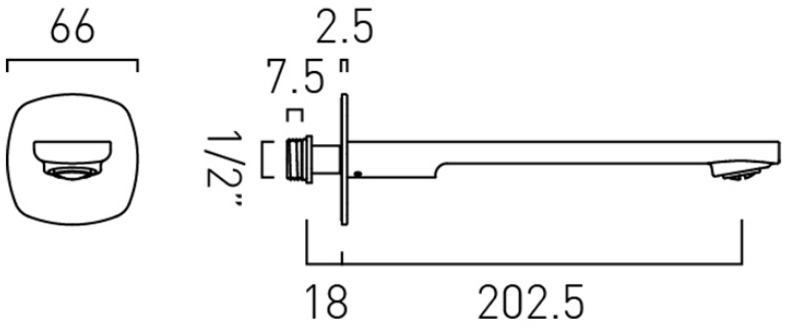

tel: 01934 744466
email: sales@vado.com
www.vado.com

WHERE INSPIRATION FLOWS
TAPS | SHOWERS | ACCESSORIES

VADO