PRODUCT DATA SHEET

Burlington®

PRODUCT CODE
GU0561SCW

RANGE
Guild

DESCRIPTION
Guild Basin 56cm 1TH White

CATEGORY	Sanitaryware
WARRANTY DETAILS	Lifetime
COLOUR	Gloss White
FINISH APPLICATION	Glazed
PRIMARY MATERIAL	Fine Fire Clay
INSTALL TYPE	Wall Mounted
PRODUCT WIDTH MM	560
PRODUCT HEIGHT MM	232
PRODUCT DEPTH MM	510
PRODUCT NET WEIGHT KG	15.5
STANDARDS	EN 31:2011, EN 14688:2015

TAP HOLES	1TH
FIXINGS INCLUDED	No
OVERFLOW	Yes
BASIN WASTE SIZE	45mm

Burlington®

TECHNICAL DIMENSIONS

Dimensions in mm unless otherwise specified.

Tolerances (per material type) apply.

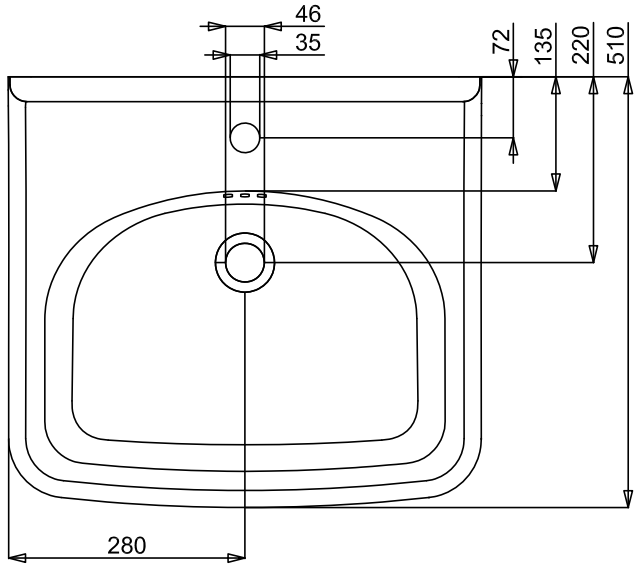

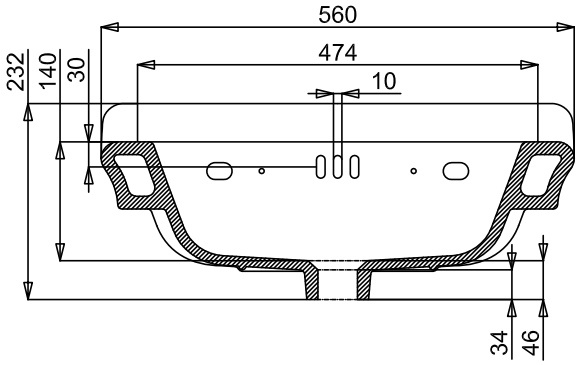

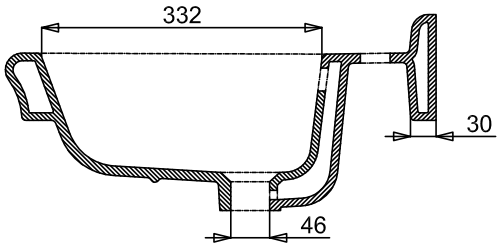

Burlington®

SPARES LIST

Only the parts labelled are available as spares.

NO SPARES AVAILABLE

PRODUCT DATA SHEET

Burlington®

PRODUCT CODE
GU0562SCW

RANGE
Guild

DESCRIPTION
Guild Basin 56cm 2TH White

CATEGORY	Sanitaryware
WARRANTY DETAILS	Lifetime
COLOUR	Gloss White
FINISH APPLICATION	Glazed
PRIMARY MATERIAL	Fine Fire Clay
INSTALL TYPE	Wall Mounted
PRODUCT WIDTH MM	560
PRODUCT HEIGHT MM	232
PRODUCT DEPTH MM	510
PRODUCT NET WEIGHT KG	15.5
STANDARDS	EN 31:2011, EN 14688:2015

TAP HOLES	2TH
FIXINGS INCLUDED	No
OVERFLOW	Yes
BASIN WASTE SIZE	45mm

Burlington®

TECHNICAL DIMENSIONS

Dimensions in mm unless otherwise specified.

Tolerances (per material type) apply.

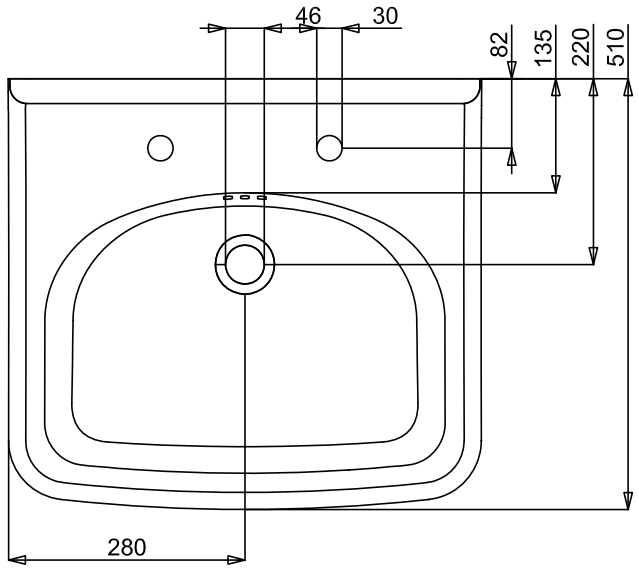

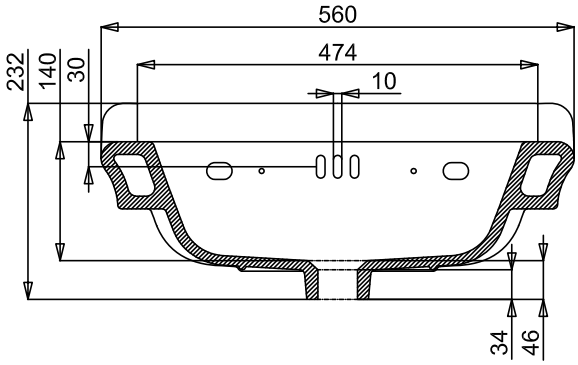

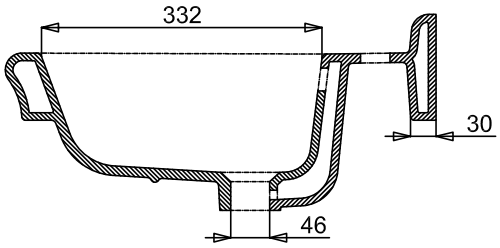

Burlington®

SPARES LIST

Only the parts labelled are available as spares.

NO SPARES AVAILABLE

PRODUCT DATA SHEET

Burlington®

PRODUCT CODE
GU0563SCW

RANGE
Guild

DESCRIPTION
Guild Basin 56cm 3TH White

CATEGORY	Sanitaryware
WARRANTY DETAILS	Lifetime
COLOUR	Gloss White
FINISH APPLICATION	Glazed
PRIMARY MATERIAL	Fine Fire Clay
INSTALL TYPE	Wall Mounted
PRODUCT WIDTH MM	560
PRODUCT HEIGHT MM	232
PRODUCT DEPTH MM	510
PRODUCT NET WEIGHT KG	15.5
STANDARDS	EN 31:2011, EN 14688:2015

TAP HOLES	3TH
FIXINGS INCLUDED	No
OVERFLOW	Yes
BASIN WASTE SIZE	45mm

Burlington®

TECHNICAL DIMENSIONS

Dimensions in mm unless otherwise specified.

Tolerances (per material type) apply.

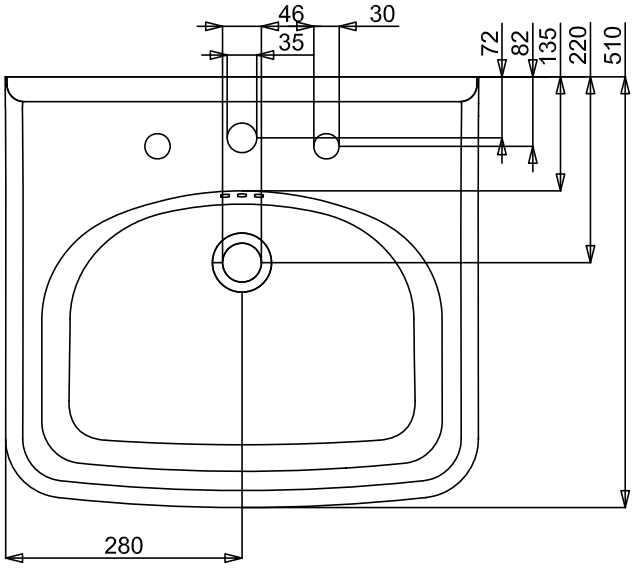

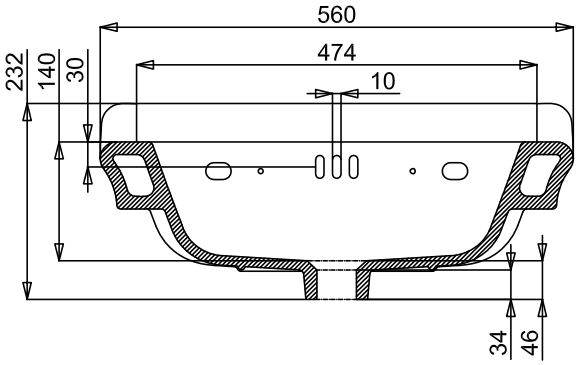

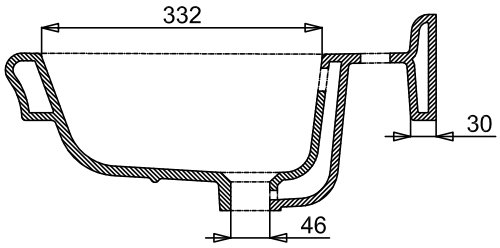

Burlington®

SPARES LIST

Only the parts labelled are available as spares.

NO SPARES AVAILABLE

PRODUCT DATA SHEET

Burlington®

PRODUCT CODE

GU5600DLOK_FS

RANGE

Guild

DESCRIPTION

Guild Floor Standing Vanity 560mm Light Oak

CATEGORY	Furniture
WARRANTY DETAILS	10 Years
COLOUR	Light Oak
FINISH APPLICATION	Veneer
PRIMARY MATERIAL	MDF
SECONDARY MATERIAL	Wood
INSTALL TYPE	Floor Standing
PRODUCT WIDTH MM	498
PRODUCT HEIGHT MM	770
PRODUCT DEPTH MM	478
PRODUCT NET WEIGHT KG	37
STANDARDS	BS EN 14749:2016+A1:2022

COLOUR CODE / REFERENCE	NATURAL ASH TINTED
DRAWER BOX	Yes
DRAWER RUNNERS	EMUCA - 3120305
DRAWER EXTENSION	Full Extension
DRAWER ADJUSTMENT	2 way adjustment
WALL HANGERS	Yes
ADJUSTABLE FEET	Yes
DRAWER CAPACITY	15
DRAWER OPERATION	Soft Close

Burlington®

TECHNICAL DIMENSIONS

Dimensions in mm unless otherwise specified.

Tolerances (per material type) apply.

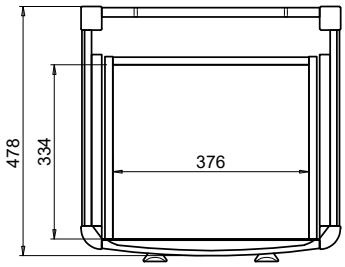

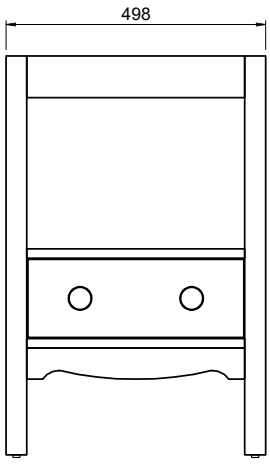

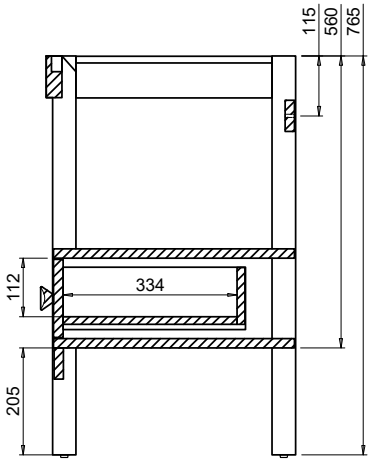

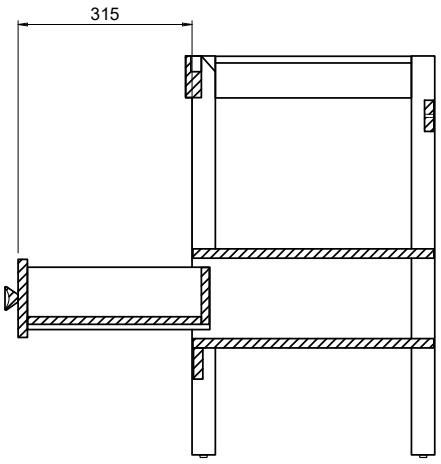

Burlington®

SPARES LIST

Only the parts labelled are available as spares.

SPARES AVAILABLE UPON REQUEST