PRODUCT DATA SHEET

Burlington®

PRODUCT CODE
GU0851SCW

RANGE
Guild

DESCRIPTION
Guild Basin 85cm 1TH White

CATEGORY	Sanitaryware
WARRANTY DETAILS	Lifetime
COLOUR	Gloss White
FINISH APPLICATION	Glazed
PRIMARY MATERIAL	Fine Fire Clay
INSTALL TYPE	Wall Mounted
PRODUCT WIDTH MM	850
PRODUCT HEIGHT MM	233
PRODUCT DEPTH MM	550
PRODUCT NET WEIGHT KG	24.5
STANDARDS	EN 31:2011, EN 14688:2015

TAP HOLES	1TH
FIXINGS INCLUDED	No
OVERFLOW	Yes
BASIN WASTE SIZE	45mm

Burlington®

TECHNICAL DIMENSIONS

Dimensions in mm unless otherwise specified.

Tolerances (per material type) apply.

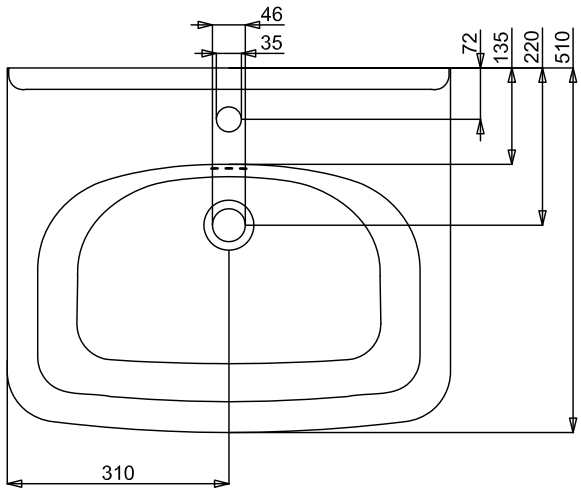

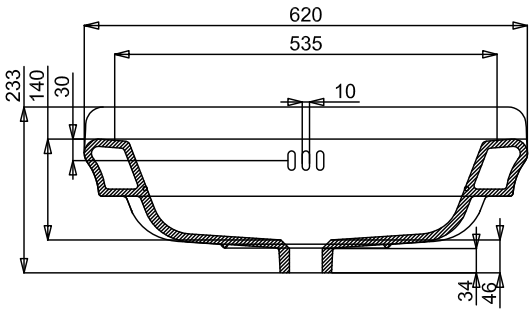

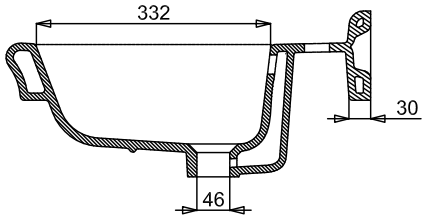

Burlington®

SPARES LIST

Only the parts labelled are available as spares.

NO SPARES AVAILABLE

PRODUCT DATA SHEET

Burlington®

PRODUCT CODE
GU0853SCW

RANGE
Guild

DESCRIPTION
Guild Basin 85cm 3TH White

CATEGORY	Sanitaryware
WARRANTY DETAILS	Lifetime
COLOUR	Gloss White
FINISH APPLICATION	Glazed
PRIMARY MATERIAL	Fine Fire Clay
INSTALL TYPE	Wall Mounted
PRODUCT WIDTH MM	850
PRODUCT HEIGHT MM	233
PRODUCT DEPTH MM	550
PRODUCT NET WEIGHT KG	24.5
STANDARDS	EN 31:2011, EN 14688:2015

TAP HOLES	3TH
FIXINGS INCLUDED	No
OVERFLOW	Yes
BASIN WASTE SIZE	45mm

Burlington®

TECHNICAL DIMENSIONS

Dimensions in mm unless otherwise specified.

Tolerances (per material type) apply.

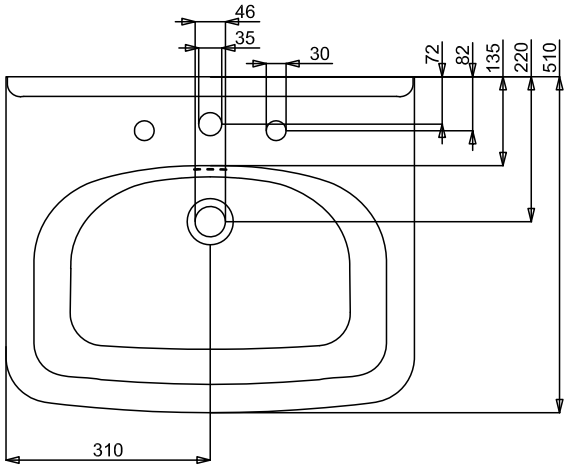

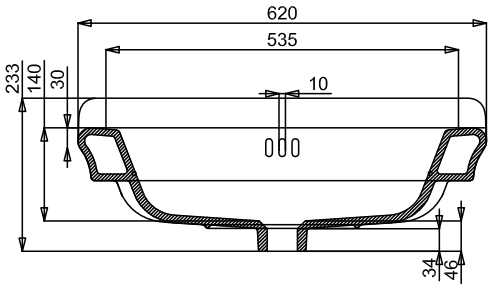

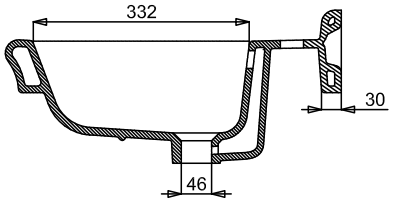

Burlington®

SPARES LIST

Only the parts labelled are available as spares.

NO SPARES AVAILABLE

PRODUCT DATA SHEET

PRODUCT CODE
GU85X77L

RANGE
Guild

DESCRIPTION
Guild Basin Stand 85cm Brushed Nickel

CATEGORY	Sanitaryware
WARRANTY DETAILS	15 Years
COLOUR	Brushed Nickel
FINISH APPLICATION	PVD
PRIMARY MATERIAL	Zinc Alloy
INSTALL TYPE	Wall Mounted
PRODUCT WIDTH MM	805
PRODUCT HEIGHT MM	770
PRODUCT DEPTH MM	488
PRODUCT NET WEIGHT KG	5.64
STANDARDS	ISO9001

FIXINGS INCLUDED	Yes
OVERFLOW	No

Burlington®

TECHNICAL DIMENSIONS

Dimensions in mm unless otherwise specified.

Tolerances (per material type) apply.

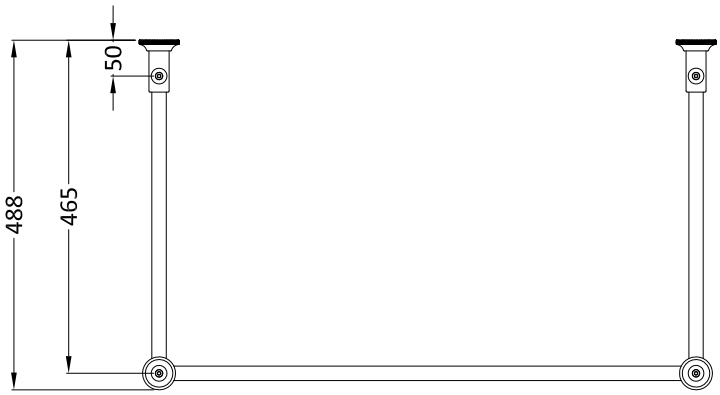

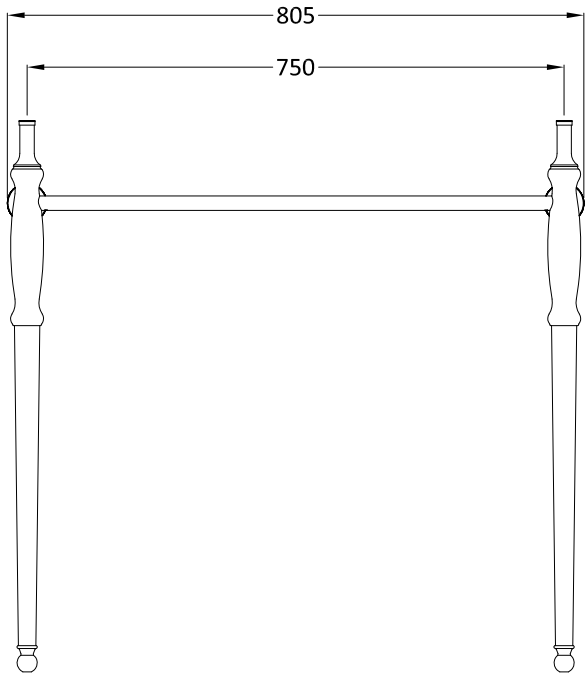

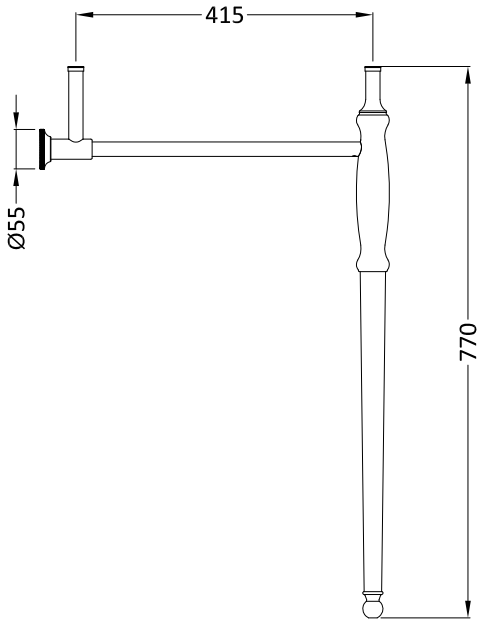

Burlington®

SPARES LIST

Only the parts labelled are available as spares.

SPARES AVAILABLE UPON REQUEST