SPECIFICATION SHEET

COLLECTION: NEBULA
PRODUCT CODE: IND-RO/20-BRN

PLUMBING SYSTEM SUITABILITY
Gravity System, Combination Boiler

STYLE
Round

CONNECTIONS / FITTINGS
1/2" female inlet

WITH AIR-INJECTION TECHNOLOGY
No

FUNCTIONS
Single Function

RUB-CLEAN NOZZLES
No

SELF-CLEANING
No

SHOWER HEAD SIZE
200mm (8")

COLLECTION NAME
Nebula

tel: 01934 744466
email: sales@vado.com
www.vado.com

WHERE INSPIRATION FLOWS
TAPS | SHOWERS | ACCESSORIES

VADO

SPECIFICATION SHEET

COLLECTION: NEBULA
PRODUCT CODE: IND-RO/20-BRN

FINISH

Brushed Nickel

MINIMUM OPERATING PRESSURE

0.2 Bar LP

GUARANTEE

15 Year Guarantee

tel: 01934 744466
email: sales@vado.com
www.vado.com

WHERE INSPIRATION FLOWS
TAPS | SHOWERS | ACCESSORIES
VADO

TECHNICAL DRAWING

COLLECTION: NEBULA
PRODUCT CODE: IND-RO/20-BRN

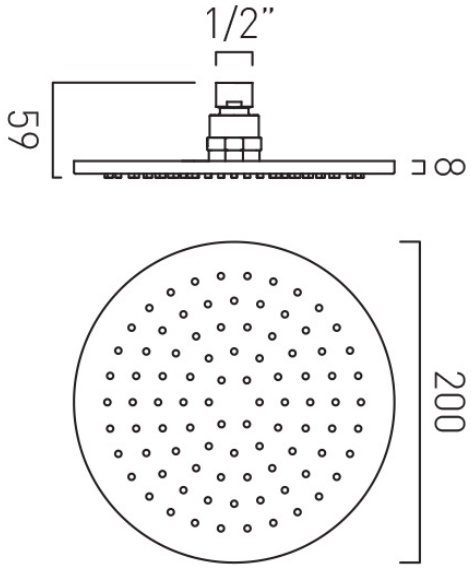

tel: 01934 744466
email: sales@vado.com
www.vado.com

WHERE INSPIRATION FLOWS
TAPS | SHOWERS | ACCESSORIES

VADO