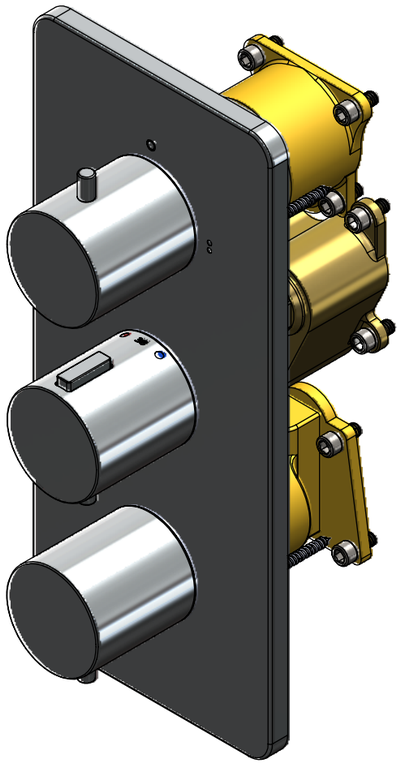

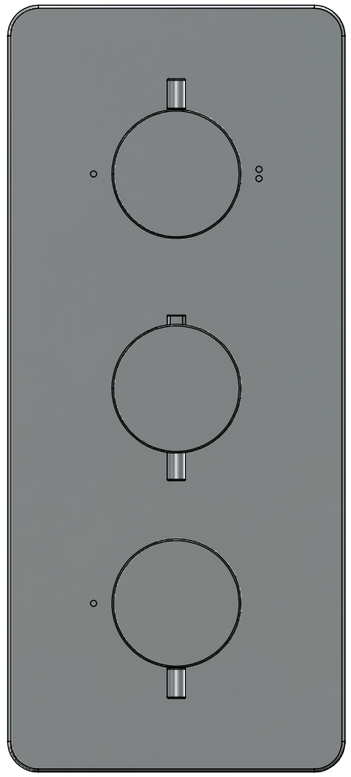

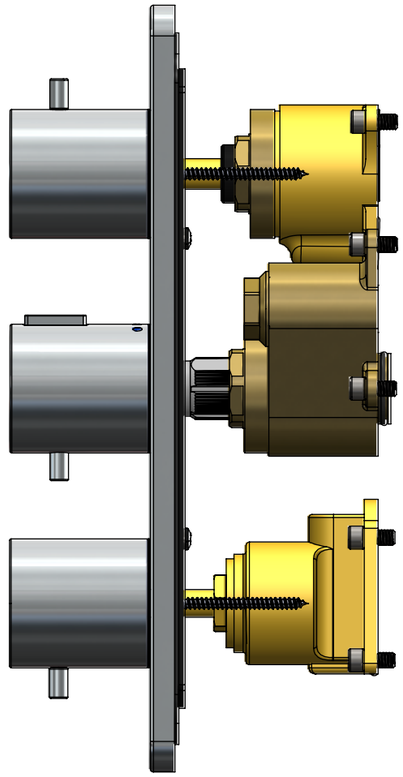

Code	Description
1086-0201-9033	EZ Box 3.0 Finish Set Only 3 Outlet - Round Handle Chrome
1086-0701-9033	EZ Box 3.0 Finish Set Only 3 Outlet - Round Handle Brushed Nickel
1086-2001-9033	EZ Box 3.0 Finish Set Only 3 Outlet - Round Handle Matt Black
1086-2801-9033	EZ Box 3.0 Finish Set Only 3 Outlet - Round Handle Brushed Bronze
1086-8601-9033	EZ Box 3.0 Finish Set Only 3 Outlet - Round Handle Matt Anthracite

UNLESS OTHERWISE SPECIFIED:
DIMENSIONS ARE IN MILLIMETERS
SURFACE FINISH:
TOLERANCES:
LINEAR:
ANGULAR:

FINISH:

DEBURR AND BREAK SHARP EDGES

DO NOT SCALE DRAWING

REVISION

	NAME	SIGNATURE	DATE
DRAWN			
CHK'D			
APPV'D			
MFG			
Q.A			

TITLE:
1086-XX01-9033 EZ Box 3.0 Round Finish Set

MATERIAL:

WEIGHT:

DWG NO.

A3

SCALE:1:5

SHEET 1 OF 2

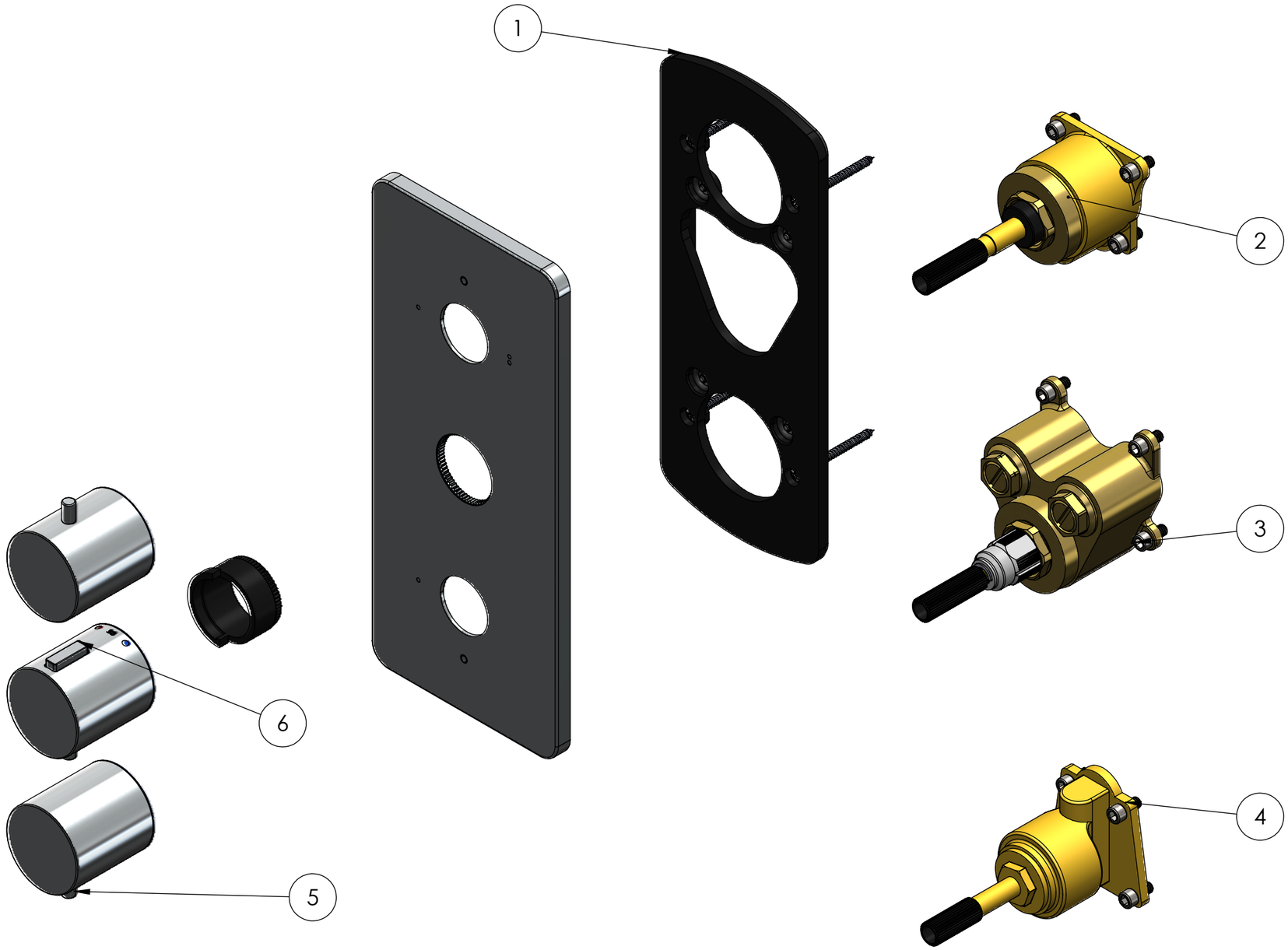

ITEM NO.	PART NUMBER	DESCRIPTION	QTY.
1	1082-XX01-F033 Fascia Plate Assy		1
2	Two Diverter Assy		1
3	Thermo Valve ASSY		1
4	1 Way Diverter Assy		1
5	1086-XX01-D001		2
6	Round Thermo Handle		1

UNLESS OTHERWISE SPECIFIED:
DIMENSIONS ARE IN MILLIMETERS
SURFACE FINISH:
TOLERANCES:
LINEAR:
ANGULAR:

FINISH:

DEBURR AND BREAK SHARP EDGES

DO NOT SCALE DRAWING

REVISION

	NAME	SIGNATURE	DATE
DRAWN			
CHK'D			
APPV'D			
MFG			
Q.A			

MATERIAL:

WEIGHT:

TITLE:

1086-XX01-9033 EZ Box 3.0 Round Finish Set

DWG NO.

A3

SCALE:1:5

SHEET 2 OF 2