SPECIFICATION SHEET

COLLECTION: SHOWERING SOLUTIONS
PRODUCT CODE: IND-OUTLET/R02-BRZ

SHOWER TYPE
Outlet

COLLECTION NAME
Showering Solutions

FINISH
Brushed Bronze

GUARANTEE
15 Year Guarantee

PLUMBING SYSTEM SUITABILITY
Pressurised System

MOUNTING
Wall Mounted

tel: 01934 744466
email: sales@vado.com
www.vado.com

WHERE INSPIRATION FLOWS
TAPS | SHOWERS | ACCESSORIES

VADO

SPECIFICATION SHEET

COLLECTION: SHOWERING SOLUTIONS
PRODUCT CODE: IND-OUTLET/R02-BRZ

tel: 01934 744466
email: sales@vado.com
www.vado.com

WHERE INSPIRATION FLOWS
TAPS | SHOWERS | ACCESSORIES
VADO

TECHNICAL DRAWING

COLLECTION: SHOWERING SOLUTIONS
PRODUCT CODE: IND-OUTLET/R02-BRZ

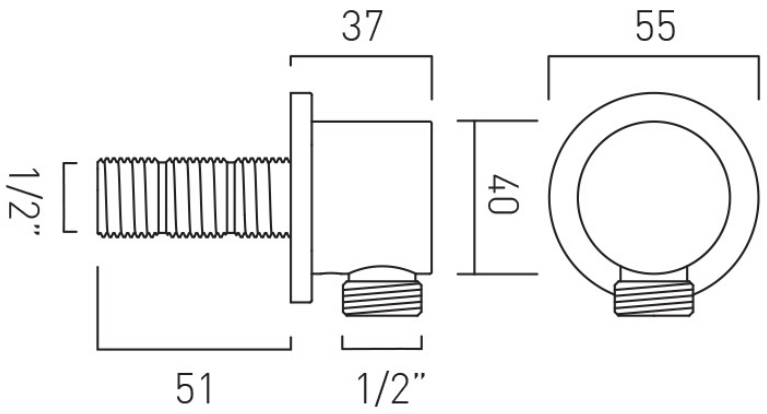

tel: 01934 744466
email: sales@vado.com
www.vado.com

WHERE INSPIRATION FLOWS
TAPS | SHOWERS | ACCESSORIES

VADO