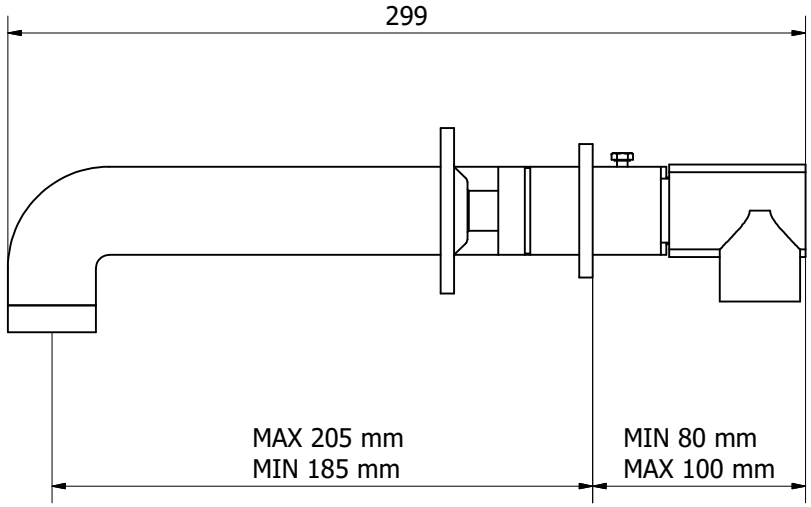

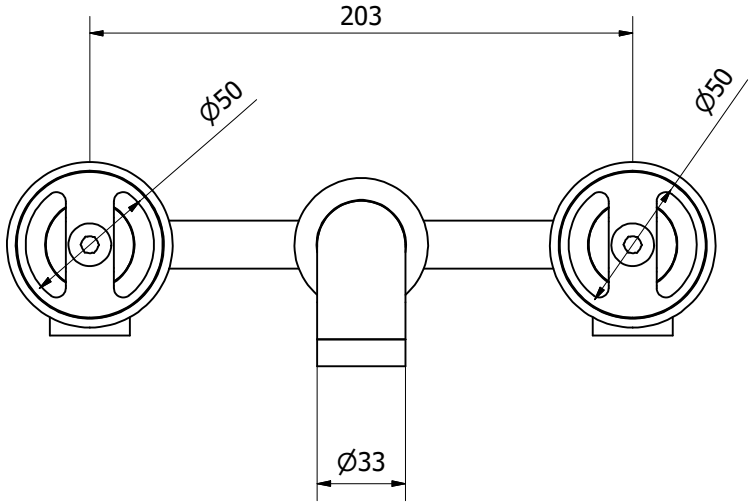

crosswater