crosswater

WLBP25X3R+ - 2Outlet Thermo Valve Multi Flow NO COLLARS Portrait

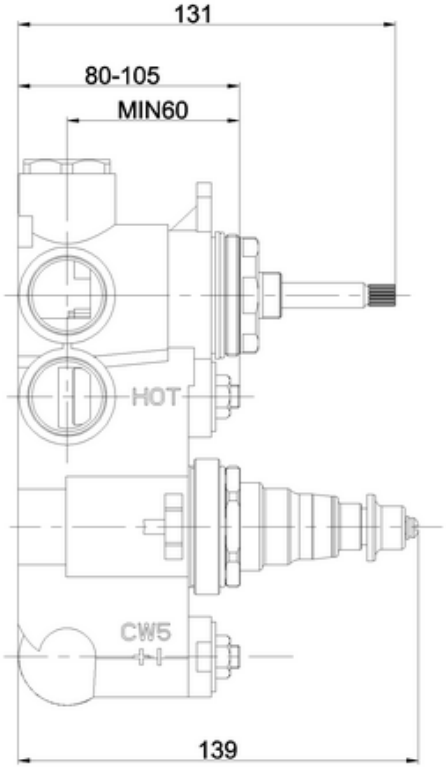

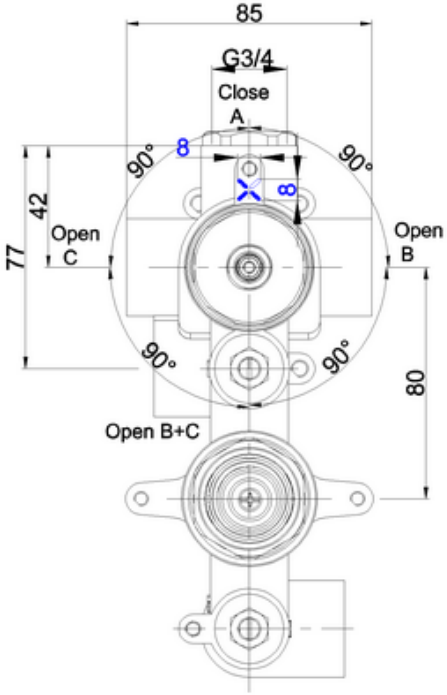

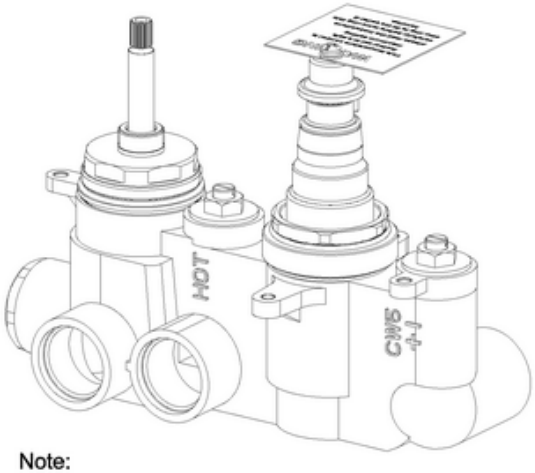

Note:
For the each part, the dimension tolerance should be followed the list below.

0 ~ 100	101 ~ 200	201 ~ 400	≥401
±1	±2	±3	±5

For the finished assembly, the dimension tolerance should be followed the list below.

0 ~ 300	≥301
±2	±5

crosswater

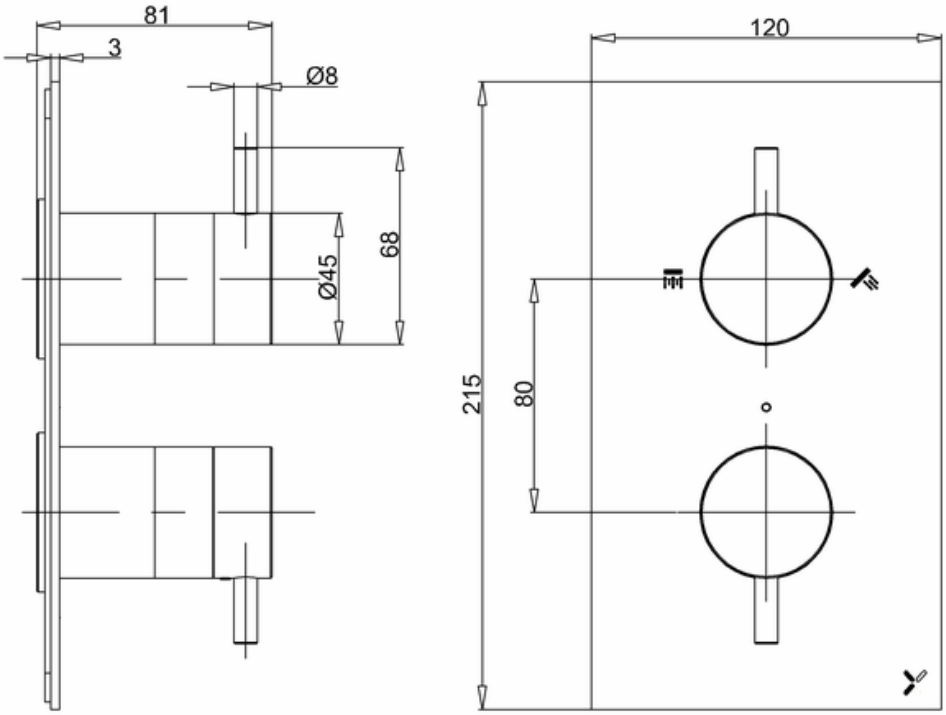

PRO1510LBPM - 1510 Backplate, Collars & Handles Matt Black