crosswater

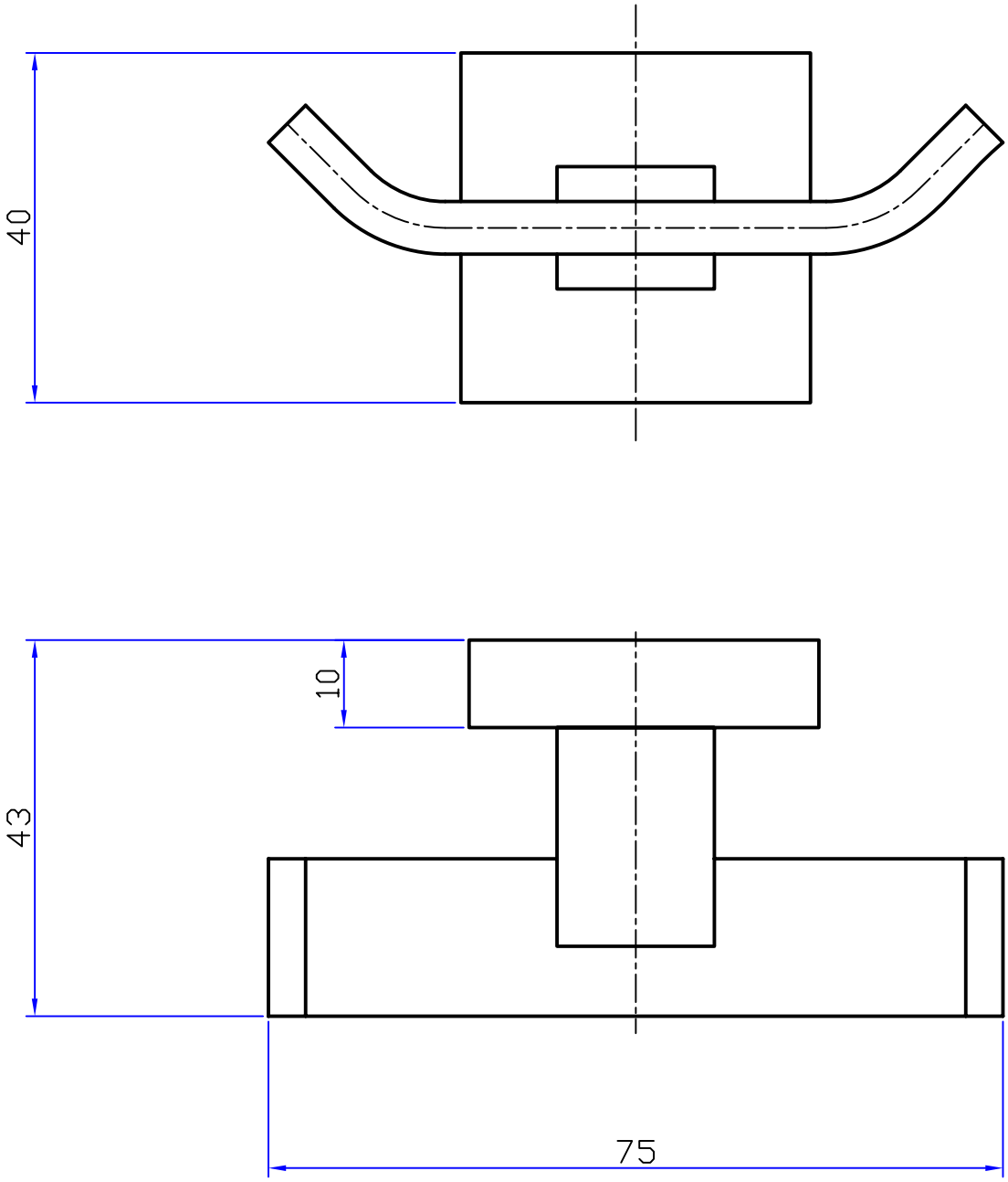

ZE022C - ZEYA ROBE HOOK