crosswater

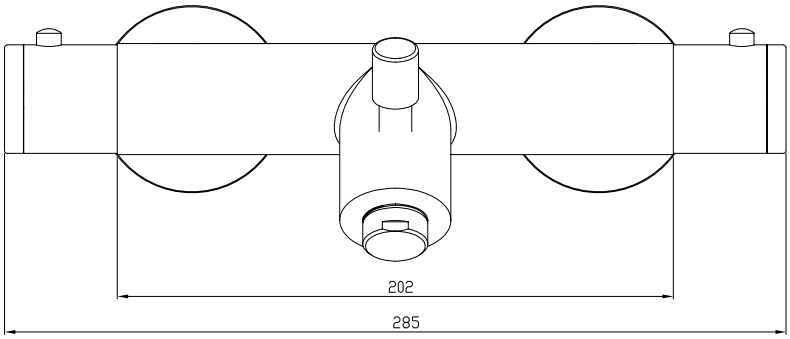

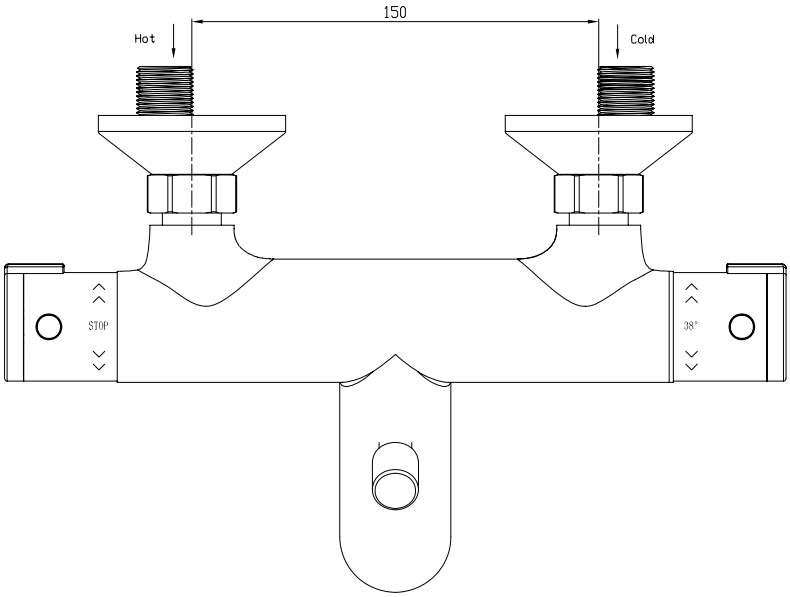

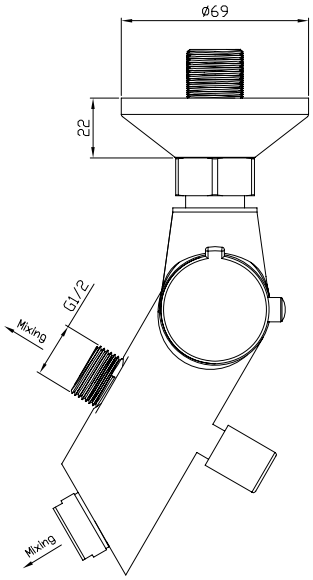

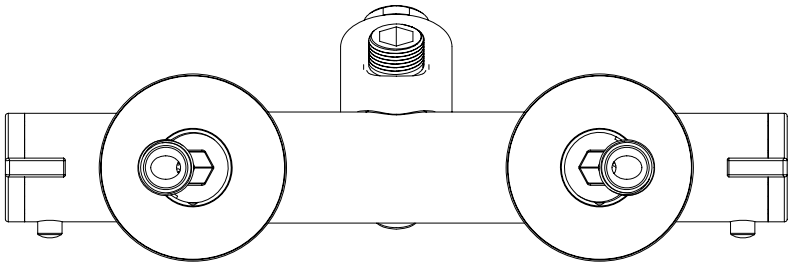

EV1211EC - KAI THERMOSTATIC BATH SHOWER MIXER Exposed