Technical Data Sheet

Product range: FLORENCE

Product code: 55275

Finishes Available: Chrome

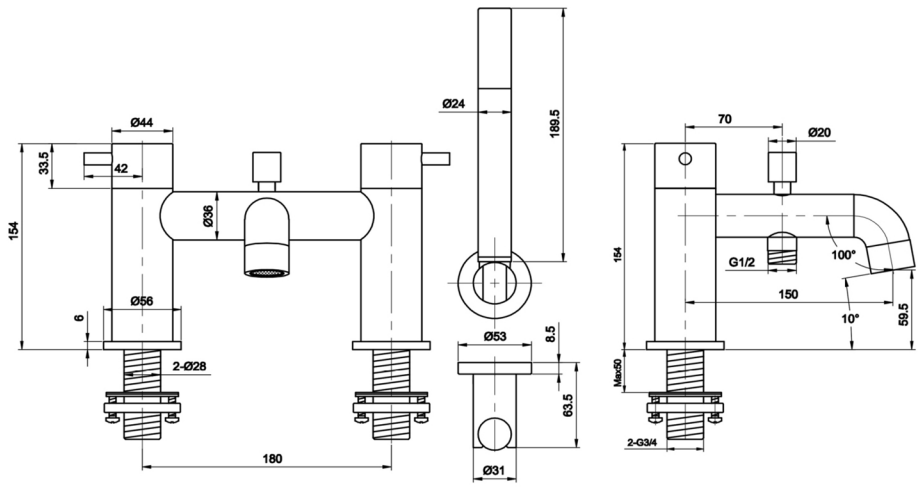

Min Pressure:
MP 0.5

Approvals:
N/A

Connections:
G 3/4"

Warranty:
15 Years (5 on cartriges)

Flow Rate
Shower
0.5Bar: 5.2L/min
1Bar: 8L/min
2Bar: 11.8L/min
3Bar: 14.3L/min

Flow Rate
Bath
0.5Bar: 8L/min
1Bar: 11L/min
2Bar: 14.4L/min
3Bar: 17.5L/min