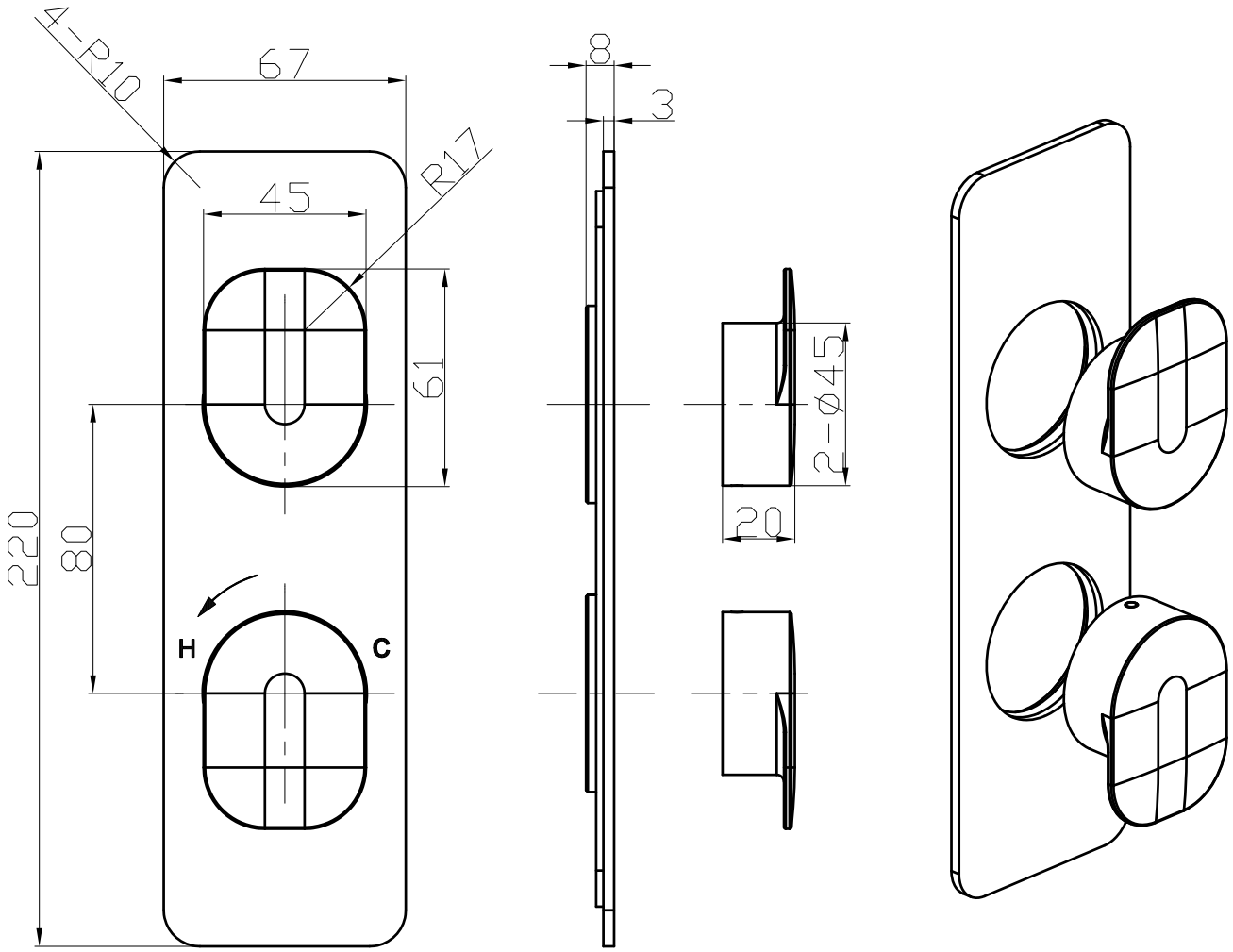
4-R10
67
R17
45
61
220
80
H
C
8
3
2-Ø45
20