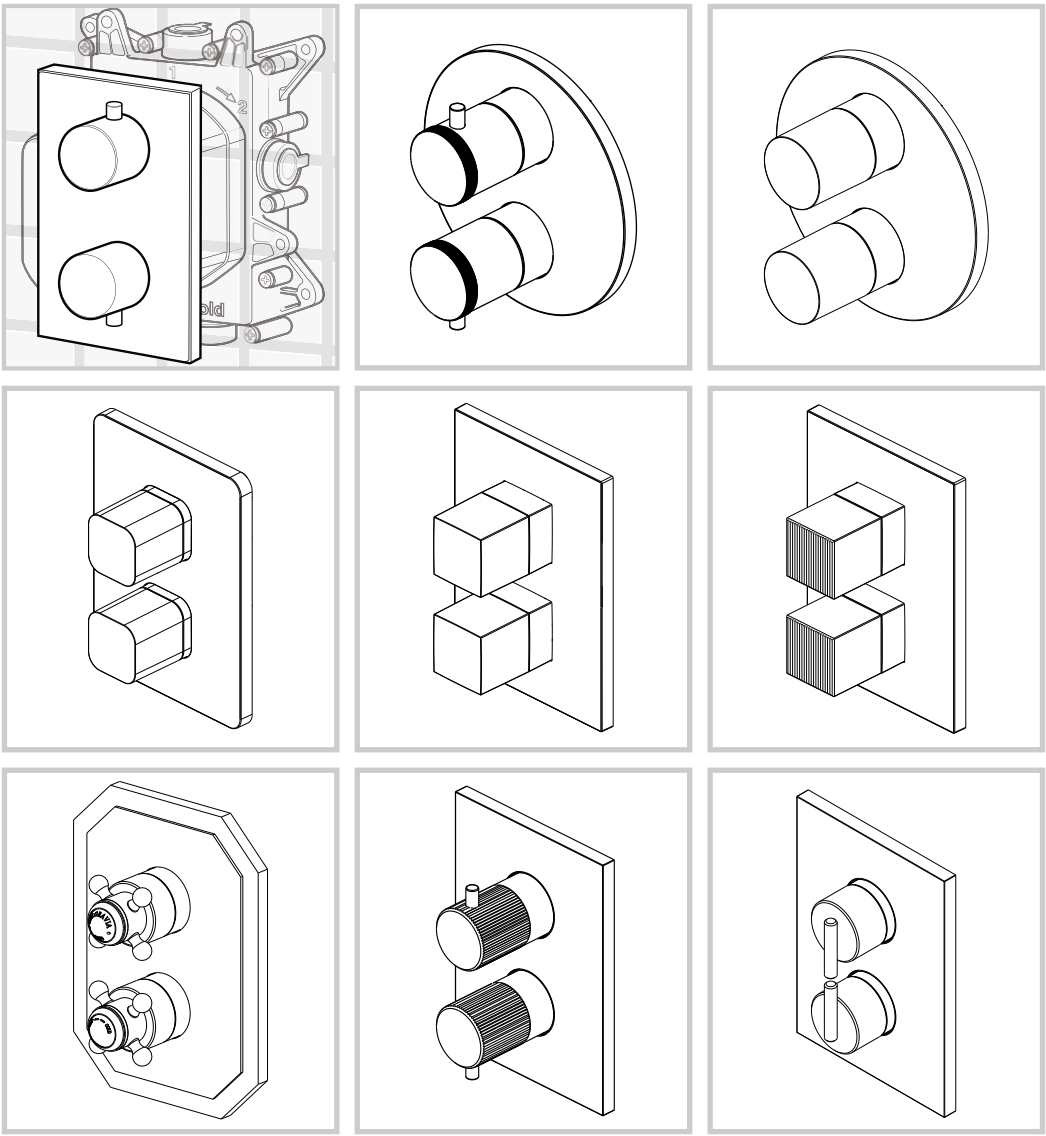

COMPLETION CONCEALED BOX

MOUNTING INSTRUCTIONS

1 TECHNICAL FEATURES

Pressure range min/max 0,5/5 bar
(in case of water pressure highter than 5 bar weeracommend installing pressure reducers).
Recommended pressure 3 bar.

Operation:
Either with gas or electric accumulation boilers.
Centralised systems.

Safety lock at:	41° C
Min. Working temperature:	3° C
Min. recommended:	15° C
Max. Working temperature:	70° C
Max. recommended:	65° C
Recommended thermal differential	50° C

Thermal disinfection is allowed.

Safety system with flow stop in case of lack of one of the two waters.

Warning: contact the plumber for the choice of the best water heating device.

Press.	FLOW RATE (L/min)			
	Term. 1 way	Term. 2 way		
bar	Exit 1/2/3	Exit 2	Exit 3	Mix
0,5	8,2	8,2	8,2	9,2
1	11,7	11,7	11,7	13,2
2	16,7	16,4	16,4	18,7
3	20,7	20	20	22,9
4	24	23	23	26,4
5	26,6	25,8	25,8	29,5

Press.	FLOW RATE (L/min)		
	Term. 3 ways		
bar	Exit 1	Exit 2	Exit 3
0,5	9,4	8,1	8,1
1	13,4	11,6	11,6
2	19,2	16,6	16,6
3	23,7	20,5	20,5
4	27,4	23,8	23,8
5	30,5	26,6	26,6

4 PRE-INSTALLATION INFORMATIONS

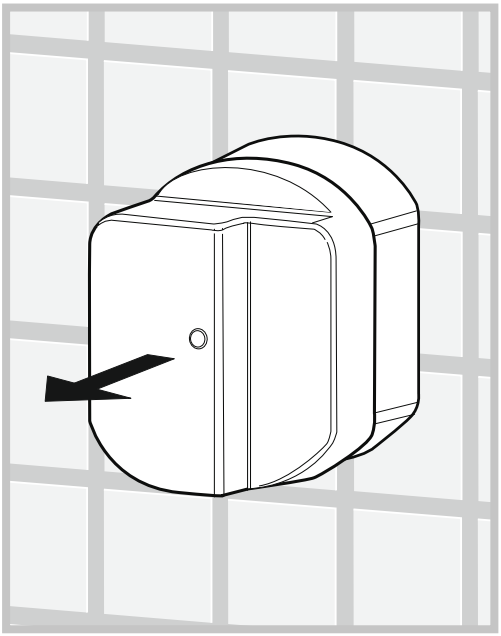

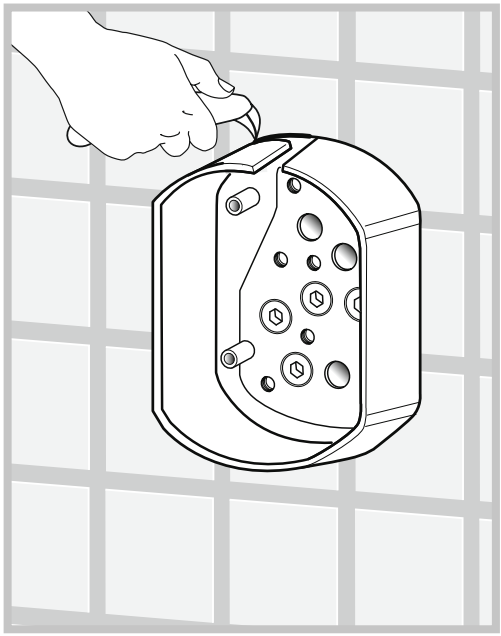

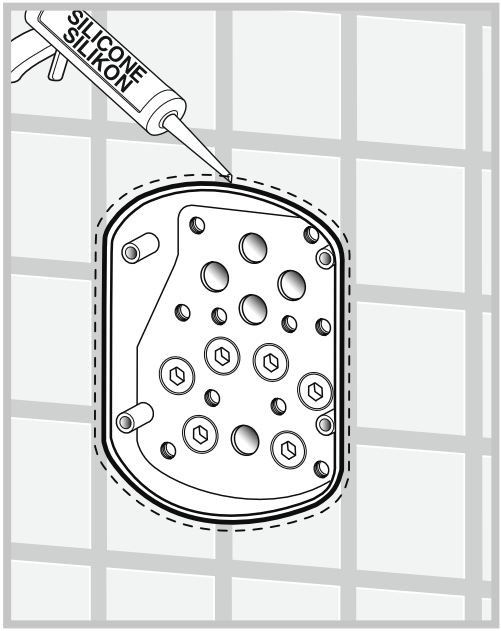

PACKAGE CONTENT - THERMOSTATIC 1-2-3 WAYS

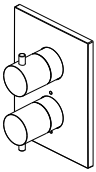

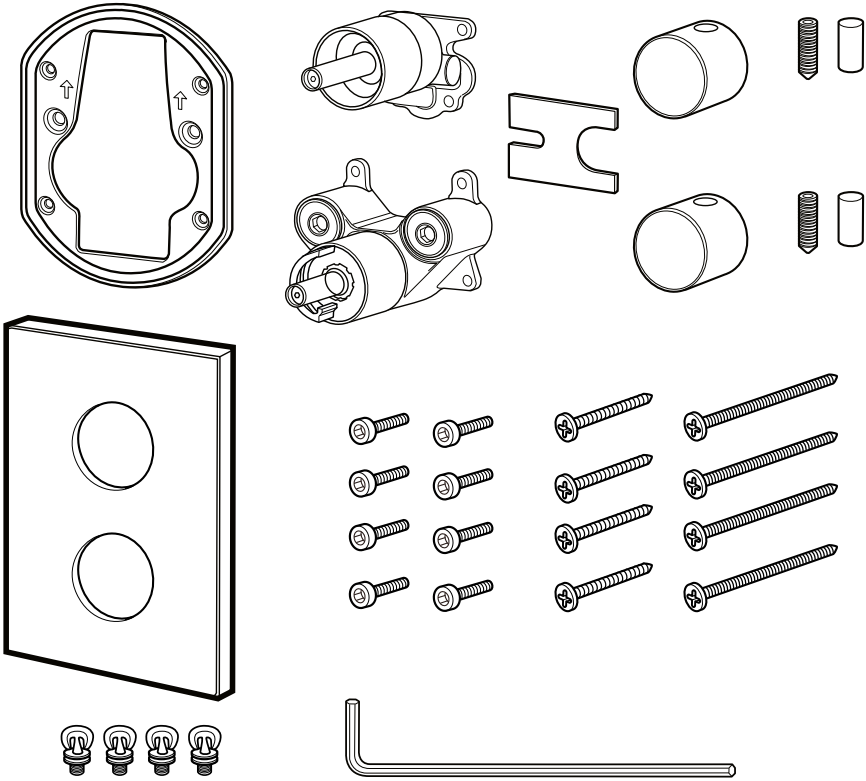

GB Mounting Instructions

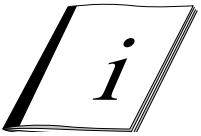

PACKAGE CONTENT - THERMOSTATIC 1-2-3 WAYS

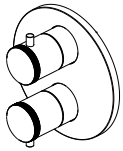

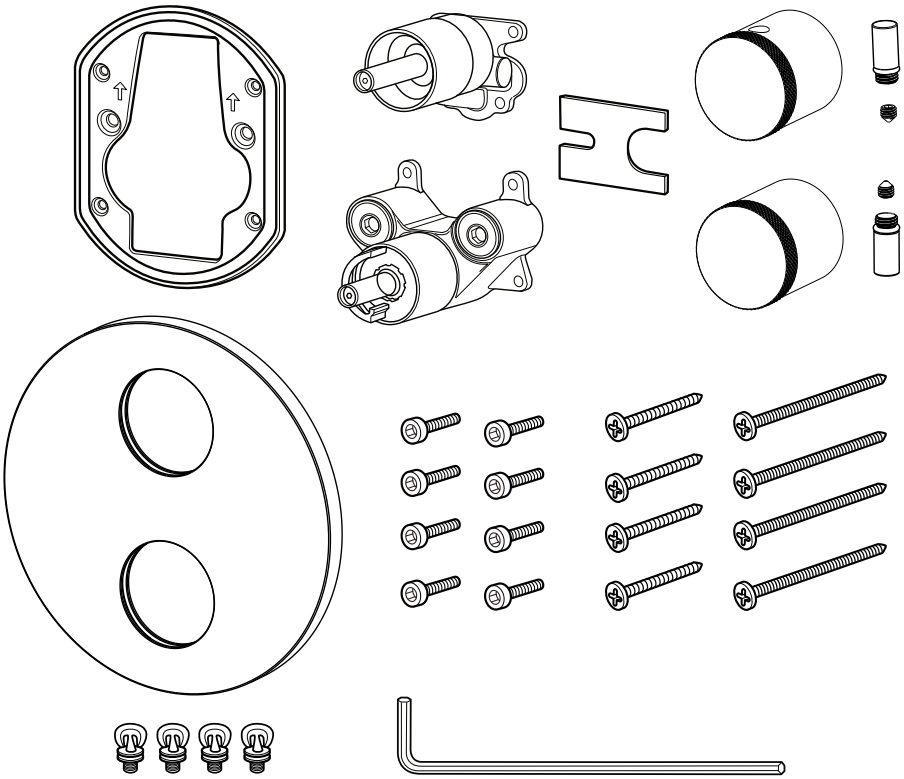

GB Mounting Instructions

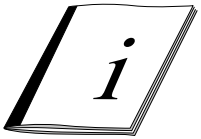

PACKAGE CONTENT - THERMOSTATIC 1-2-3 WAYS

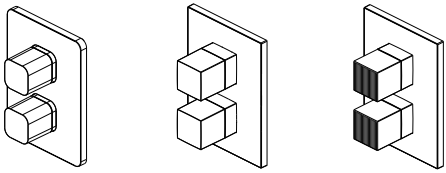

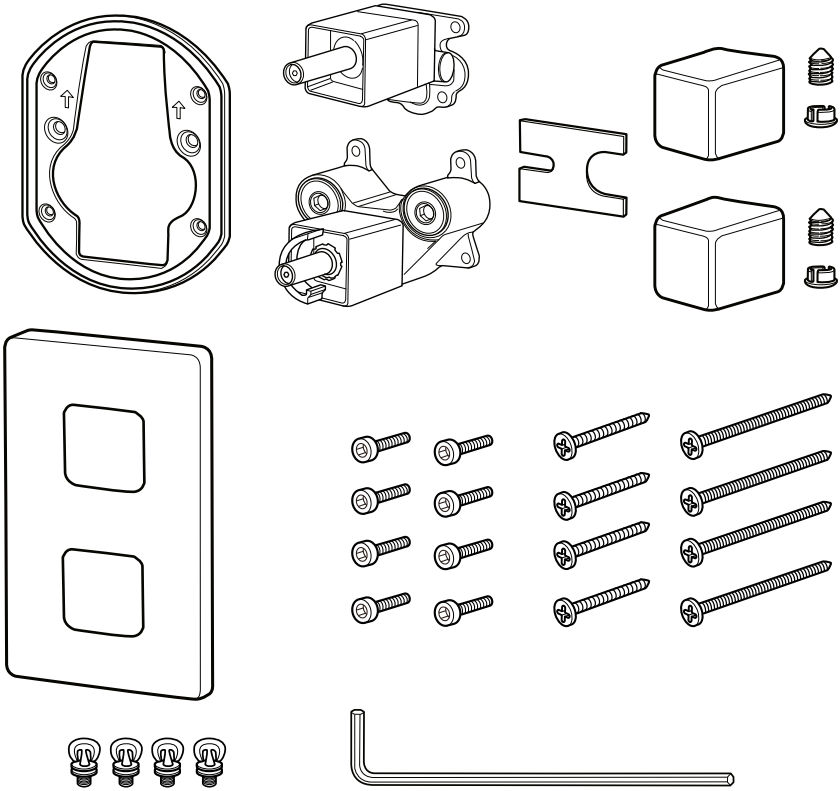

GB Mounting Instructions

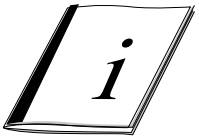

PACKAGE CONTENT - THERMOSTATIC 1-2-3 WAYS

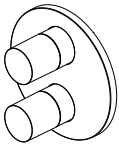

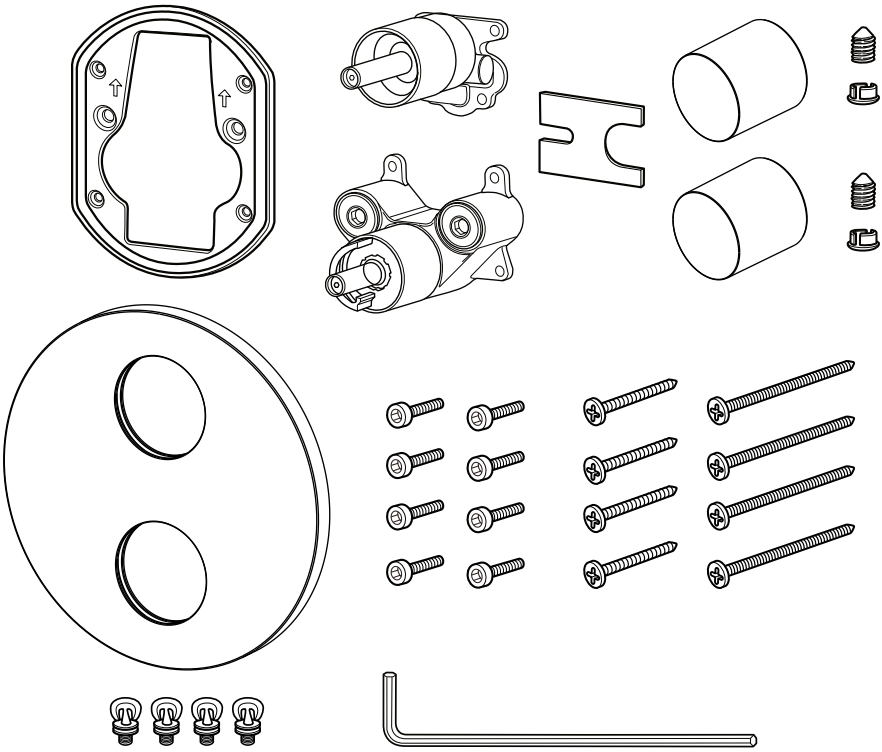

GB Mounting Instructions

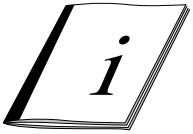

PACKAGE CONTENT - THERMOSTATIC 1-2-3 WAYS

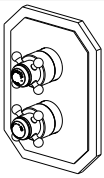

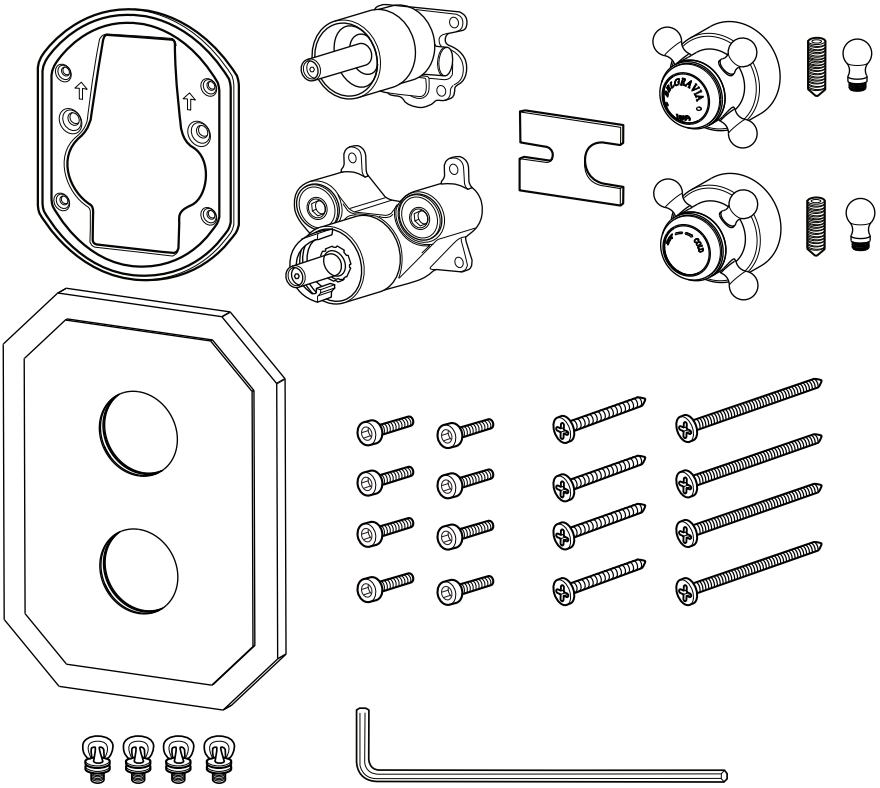

GB Mounting Instructions

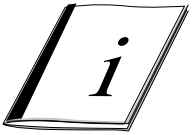

PACKAGE CONTENT - THERMOSTATIC 1-2-3 WAYS

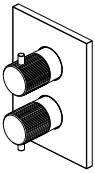

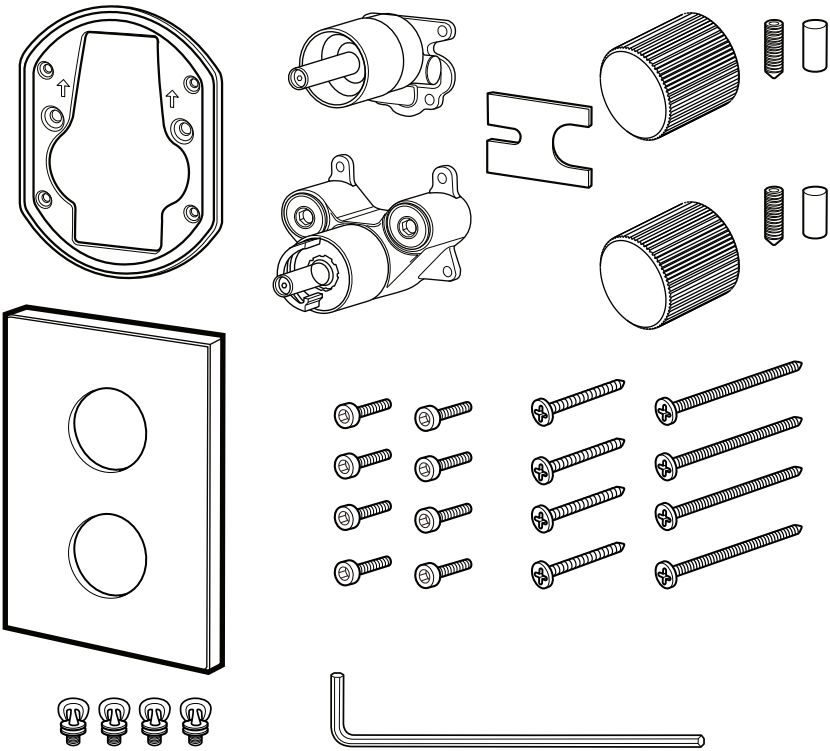

GB Mounting Instructions

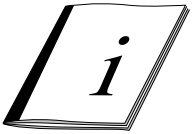

PACKAGE CONTENT - THERMOSTATIC 1-2-3 WAYS

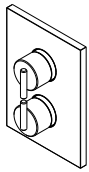

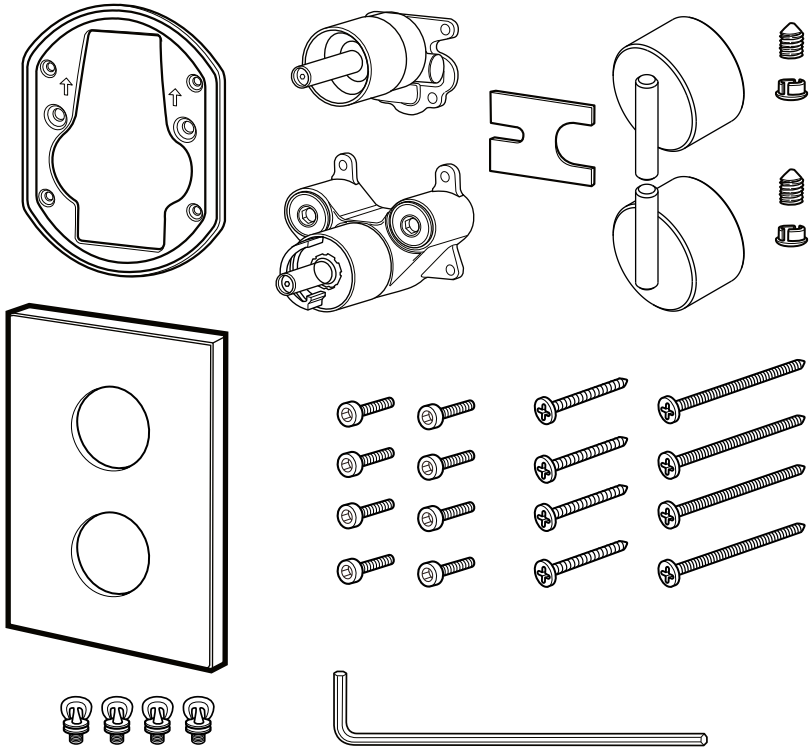

GB Mounting Instructions

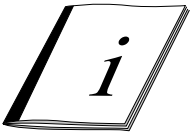

INSTALLATION

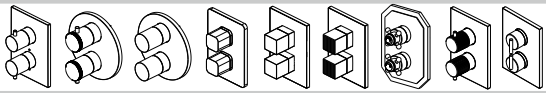

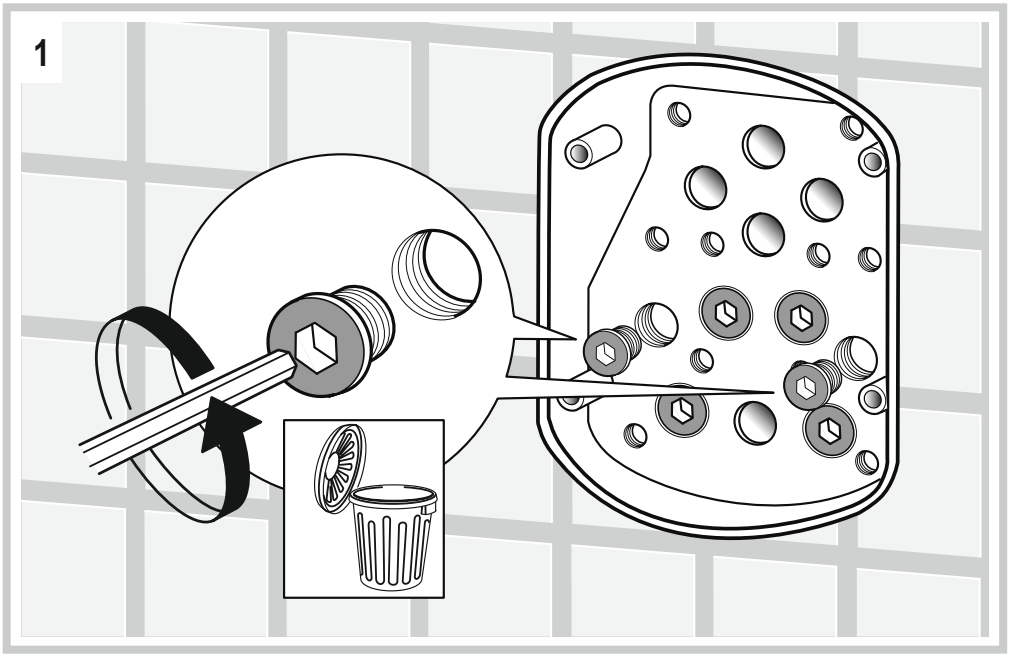

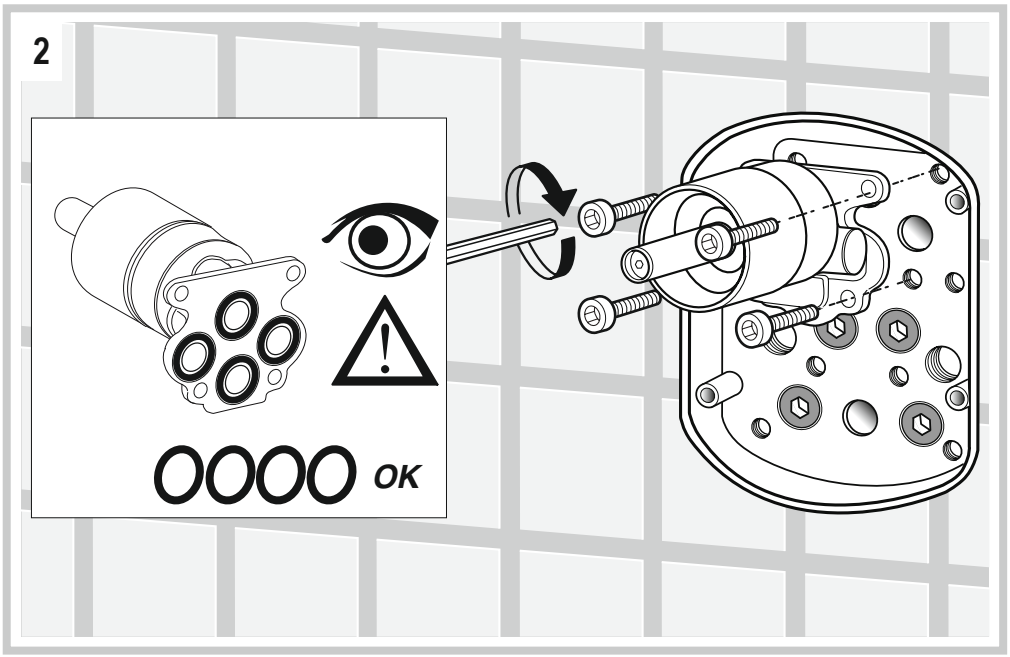

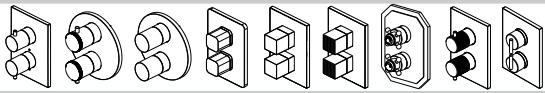

3

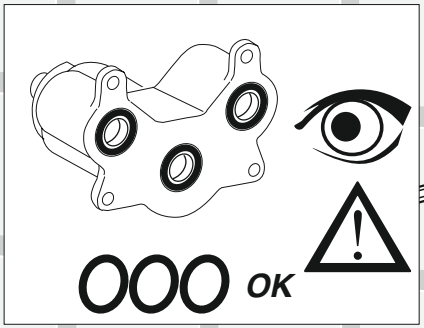

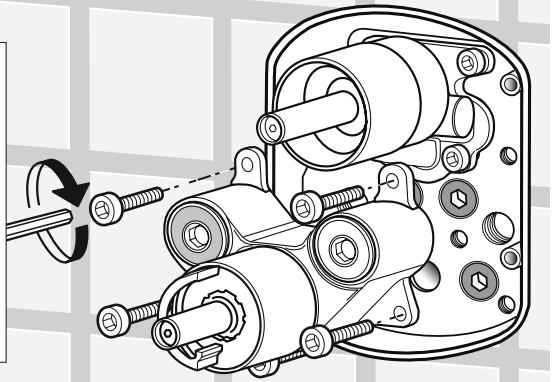

4

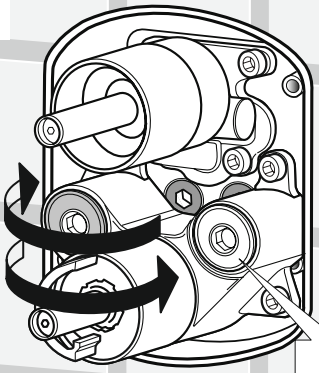

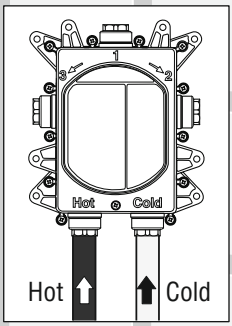

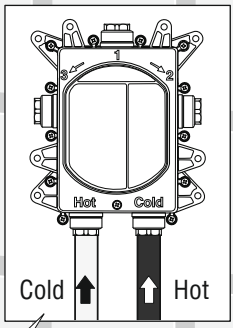

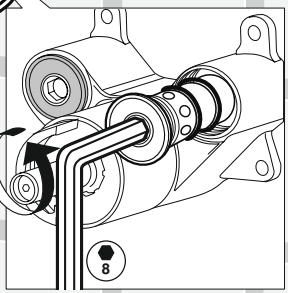

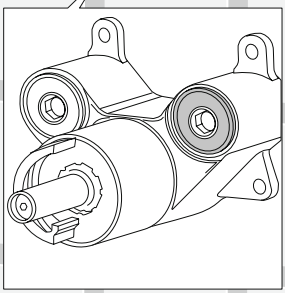

INSTALLATION

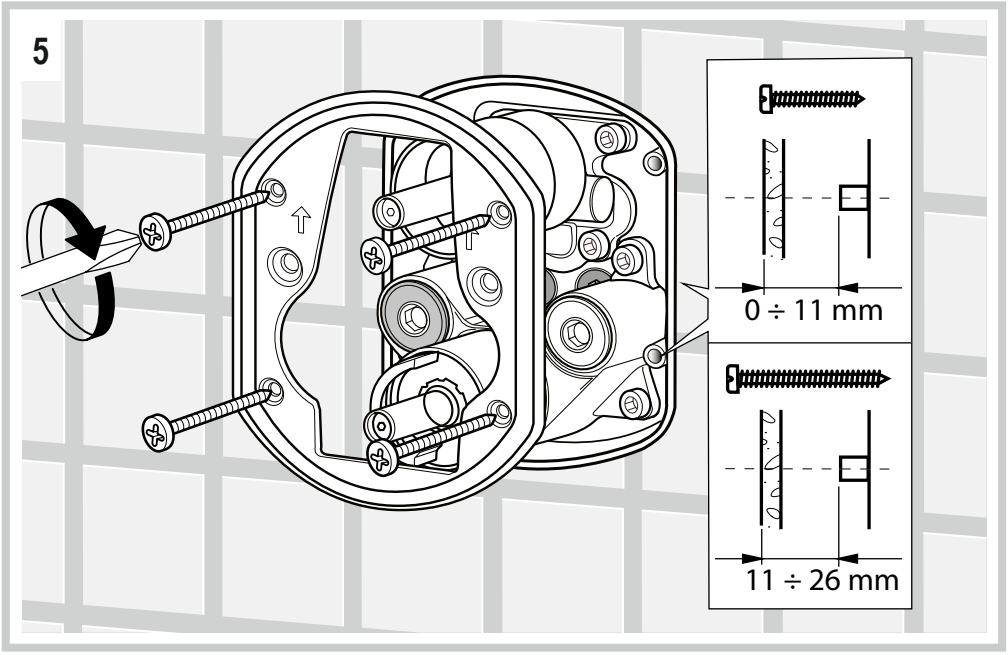

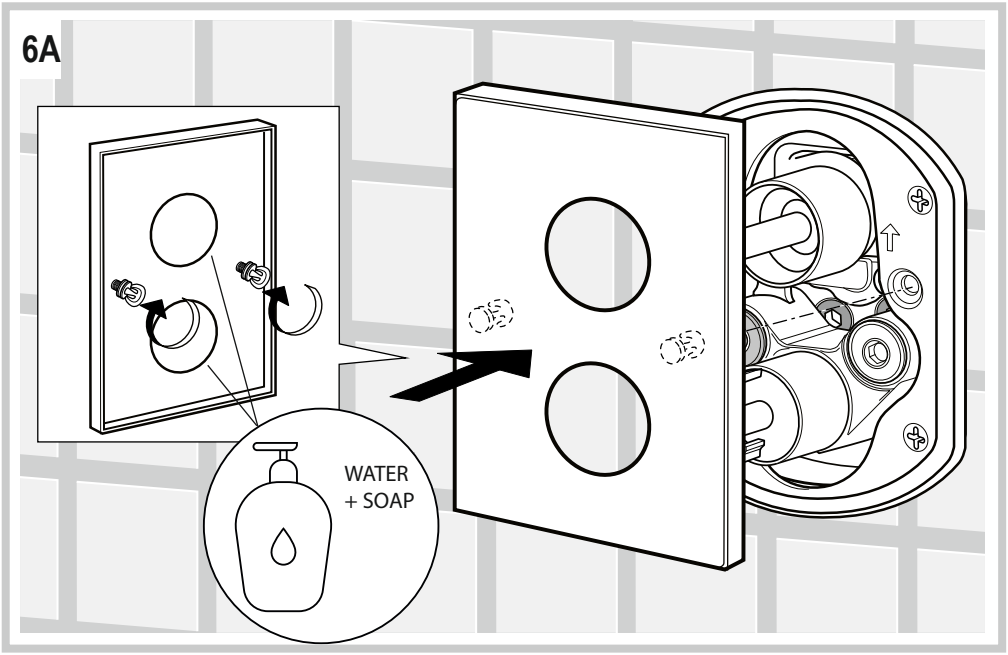

INSTALLATION

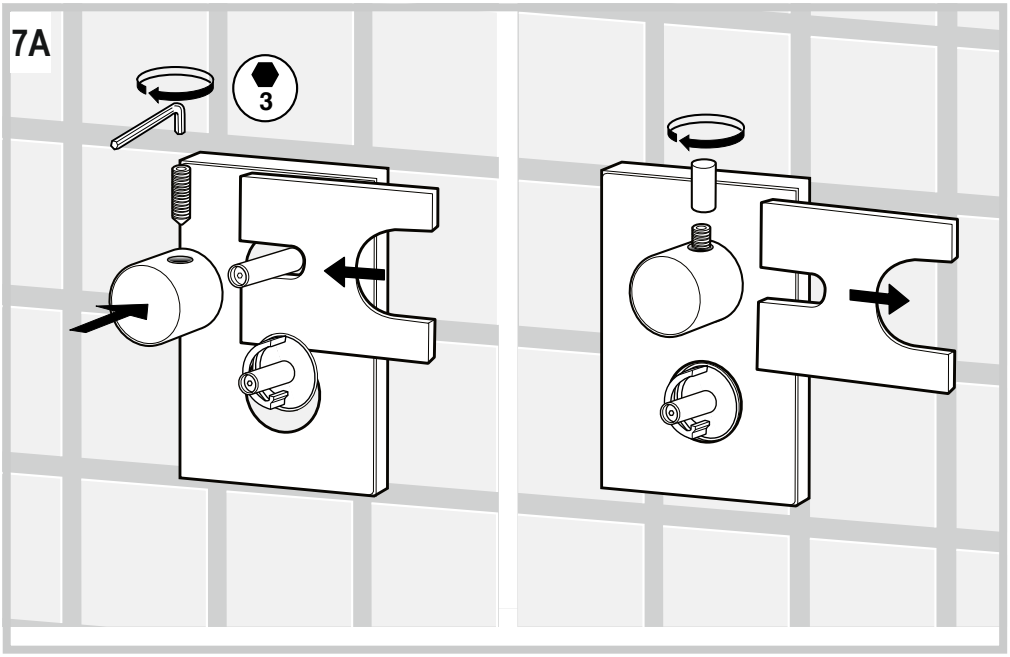

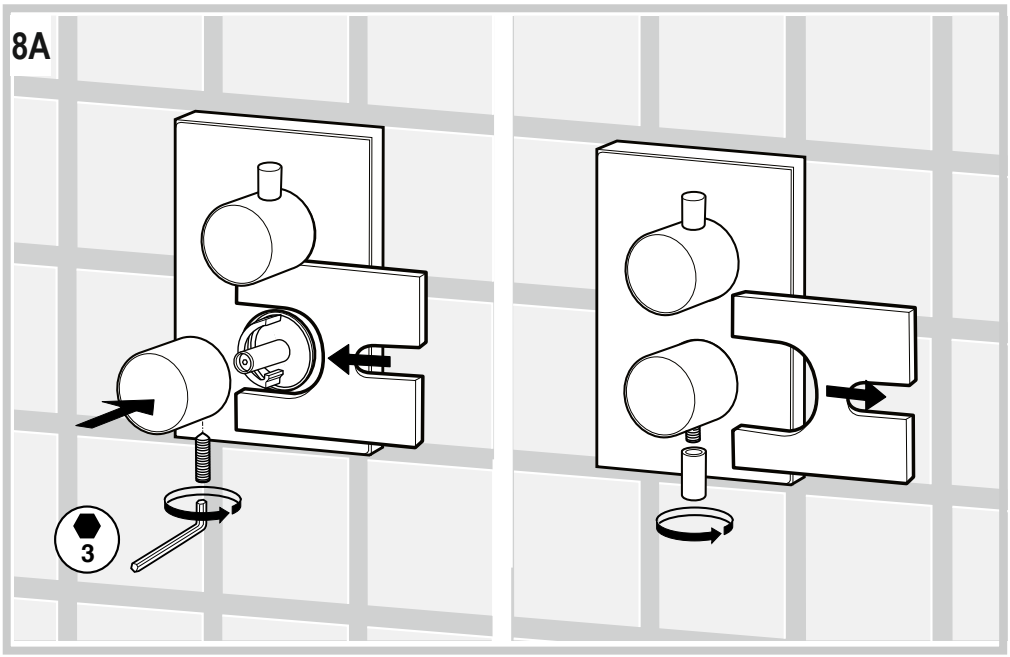

INSTALLATION

5

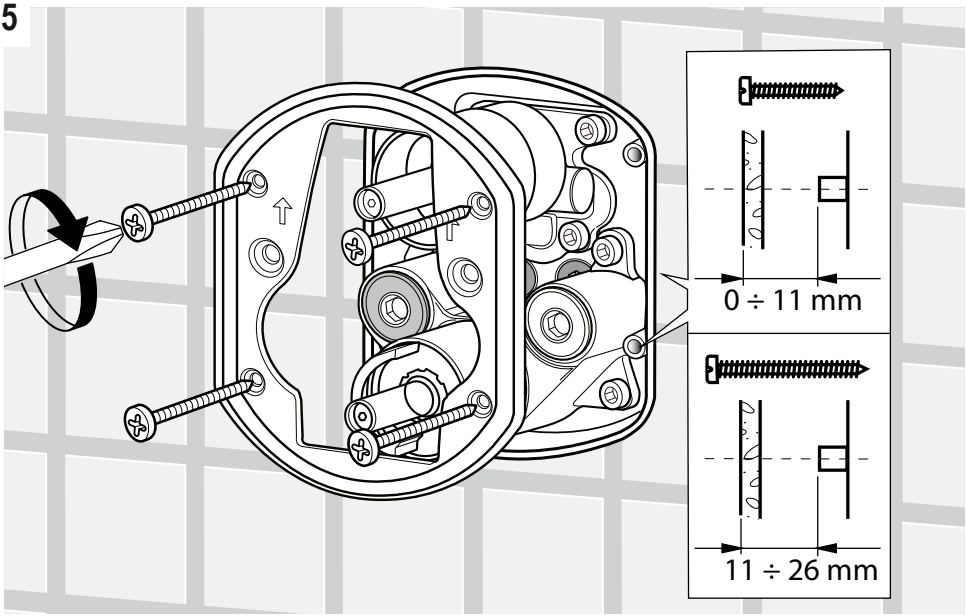

6B

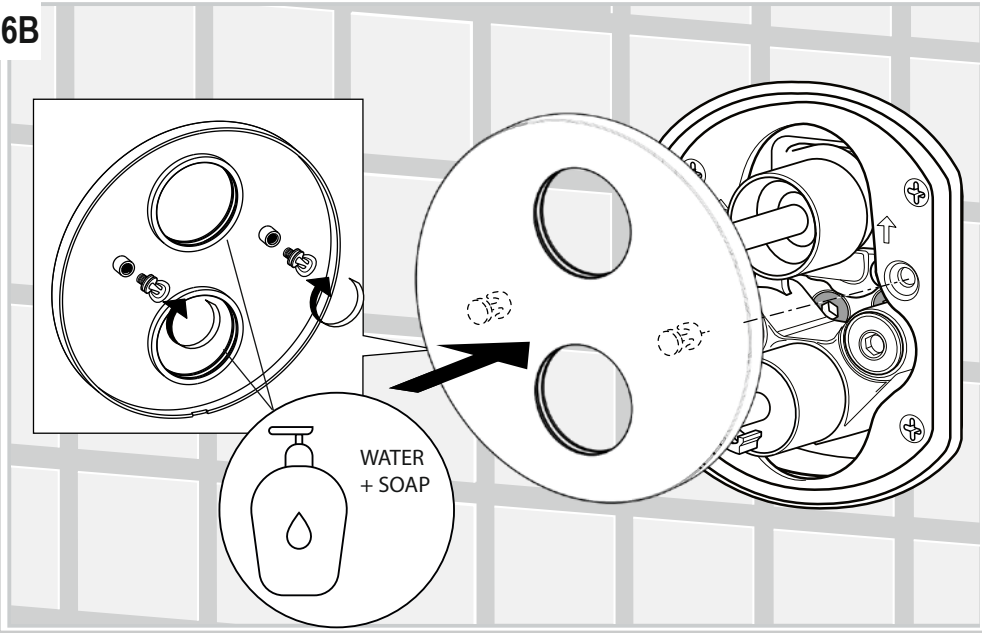

INSTALLATION

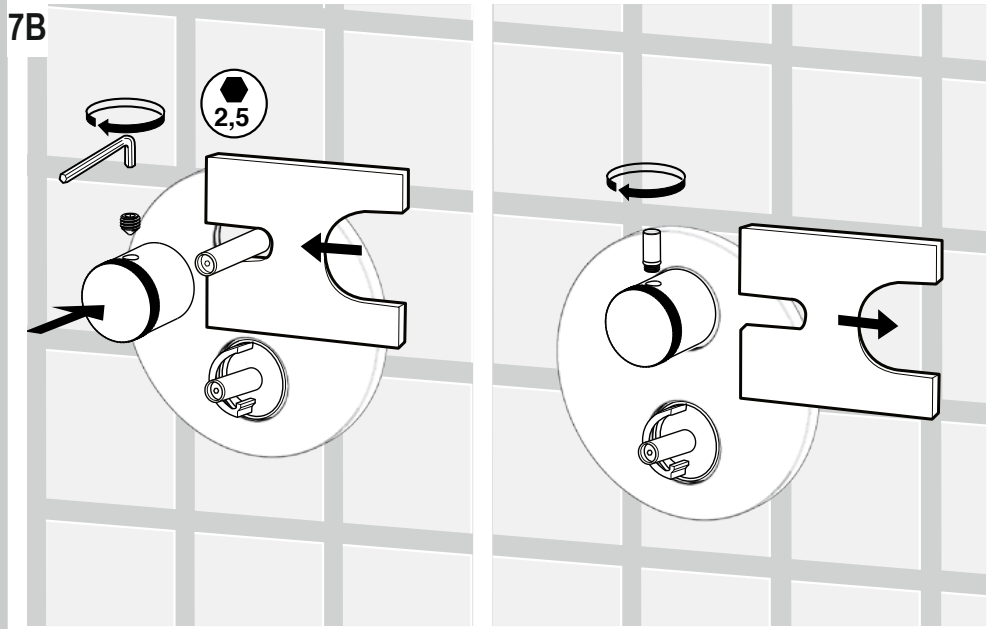

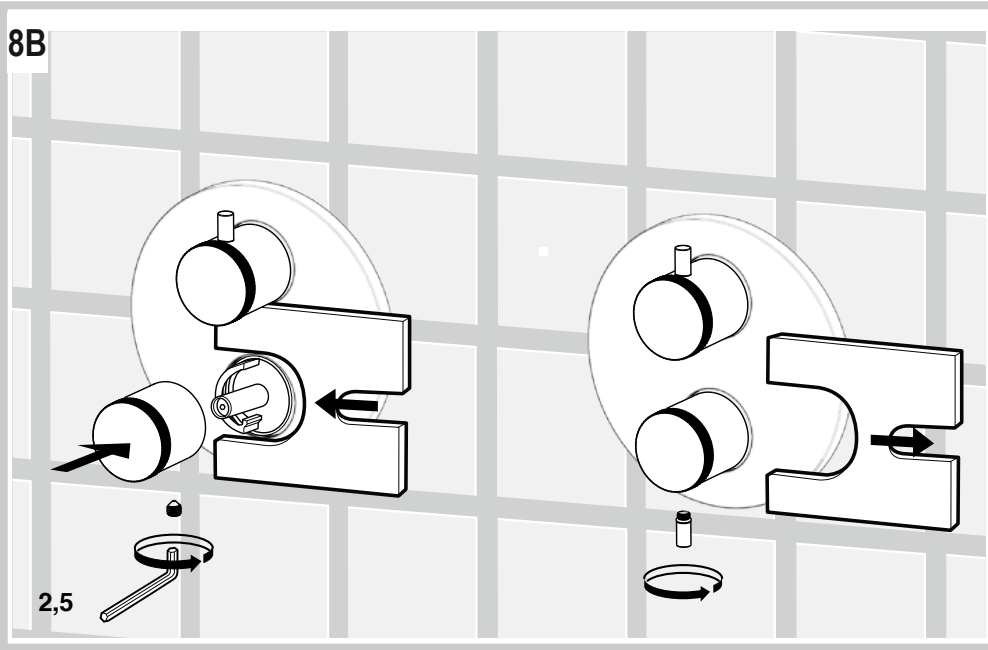

INSTALLATION

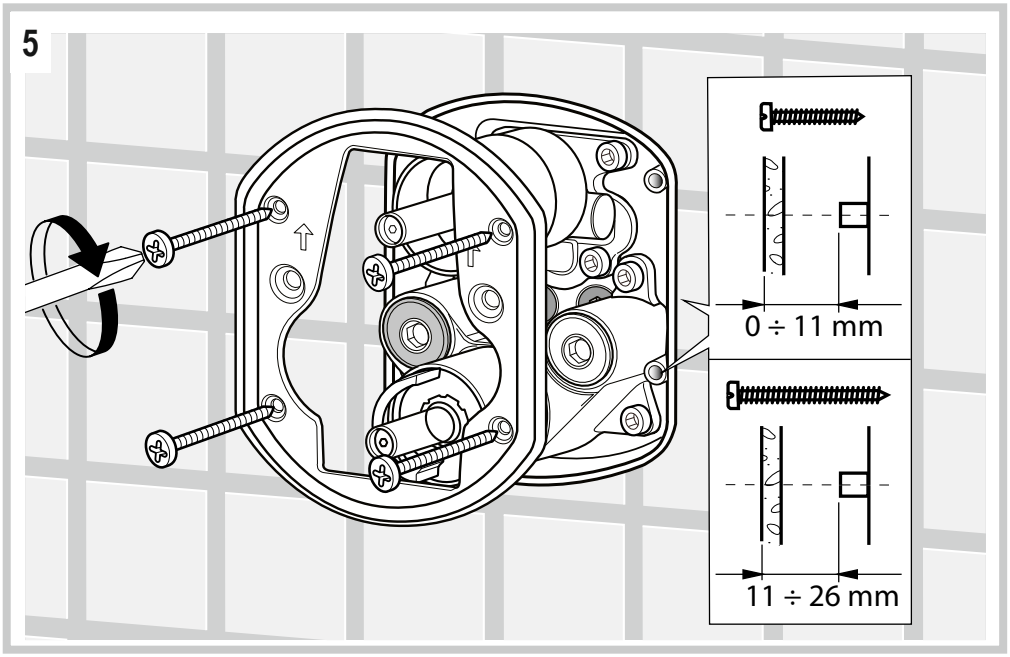

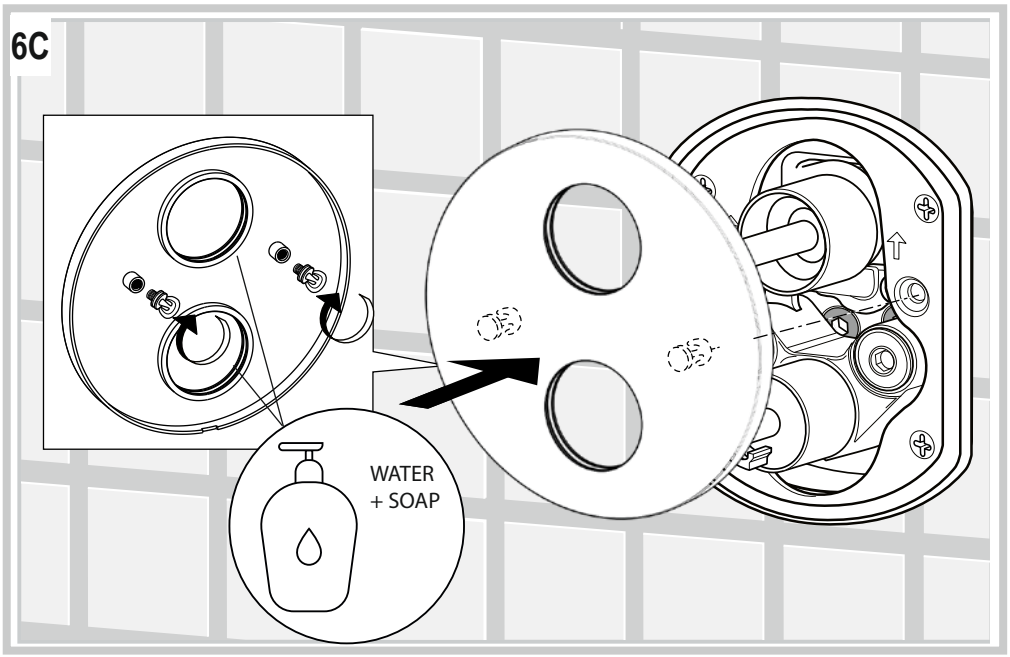

INSTALLATION

7C

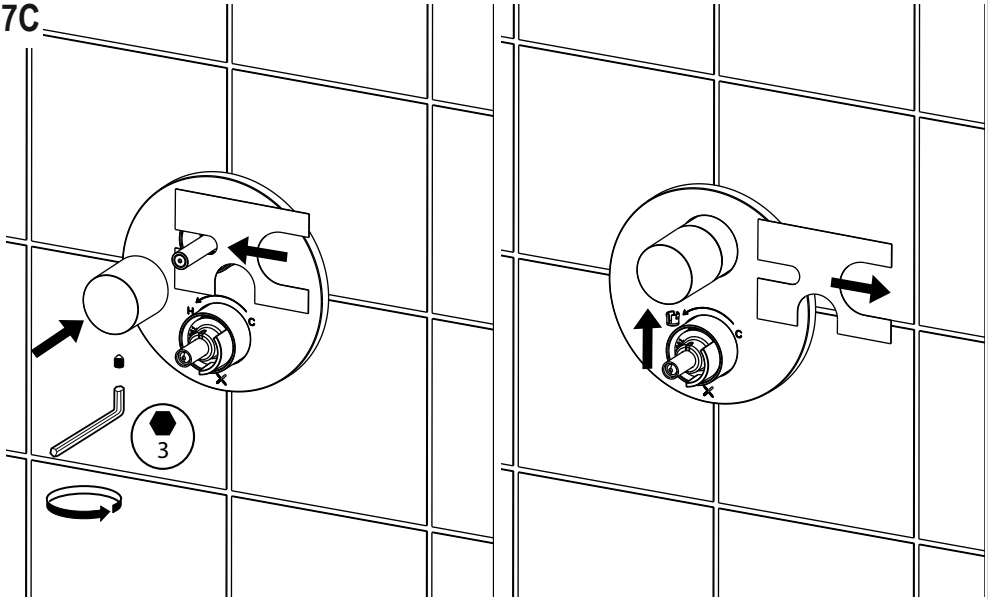

8C

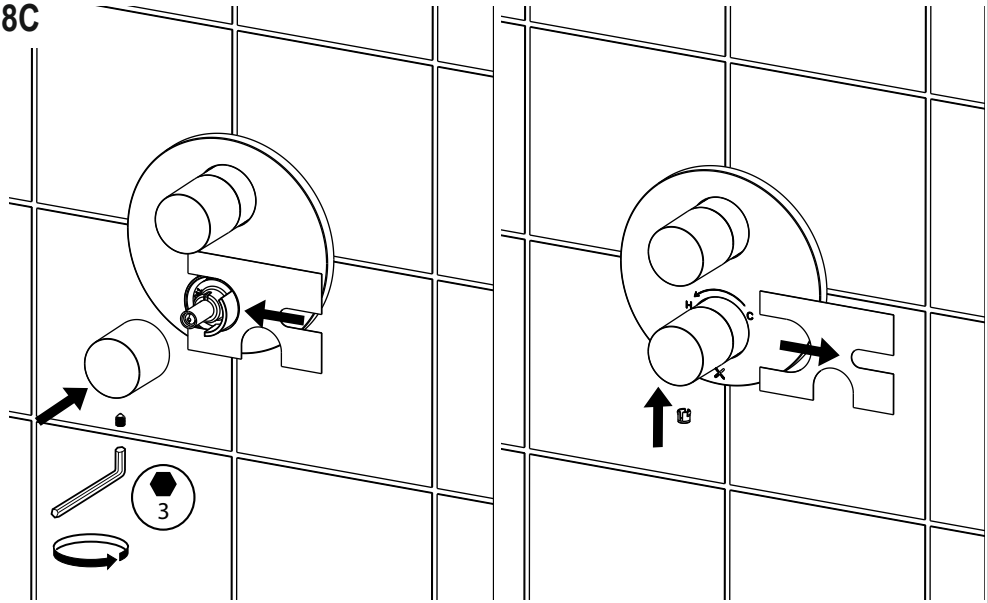

INSTALLATION

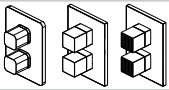

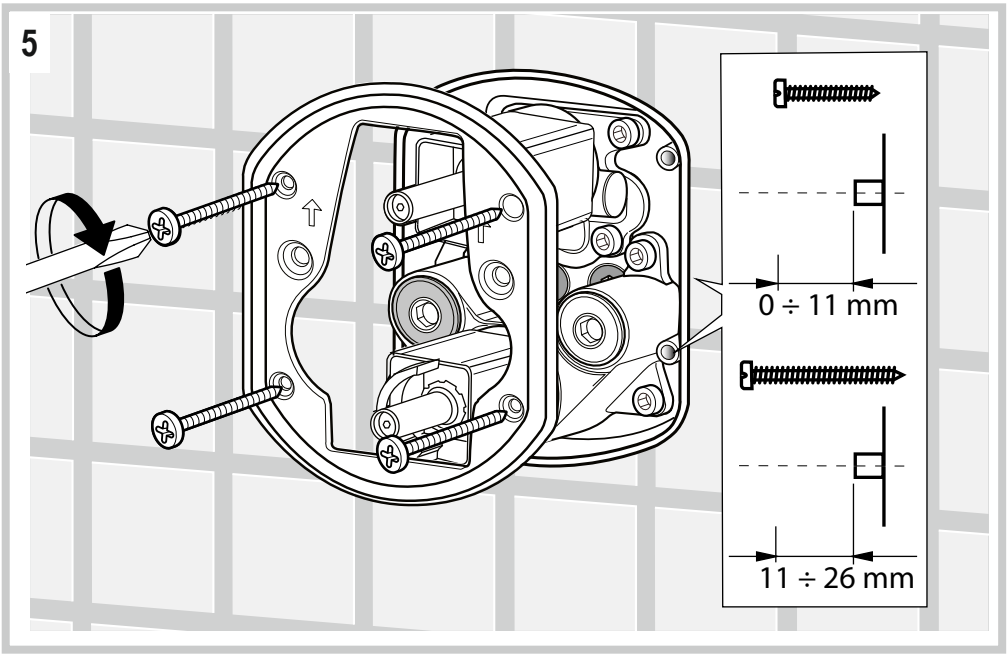

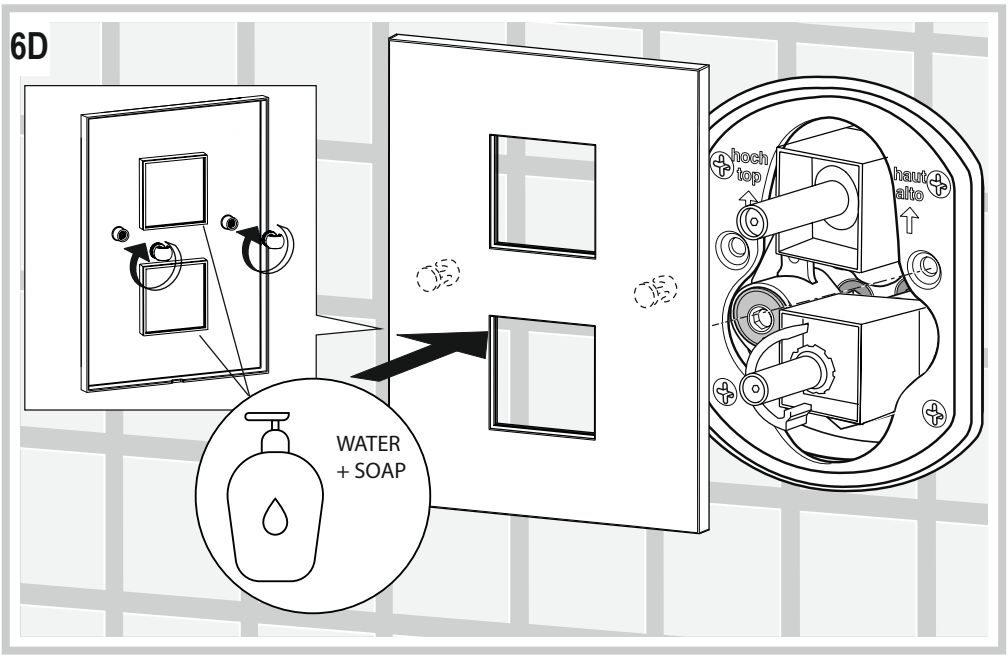

INSTALLATION

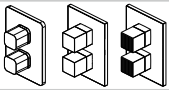

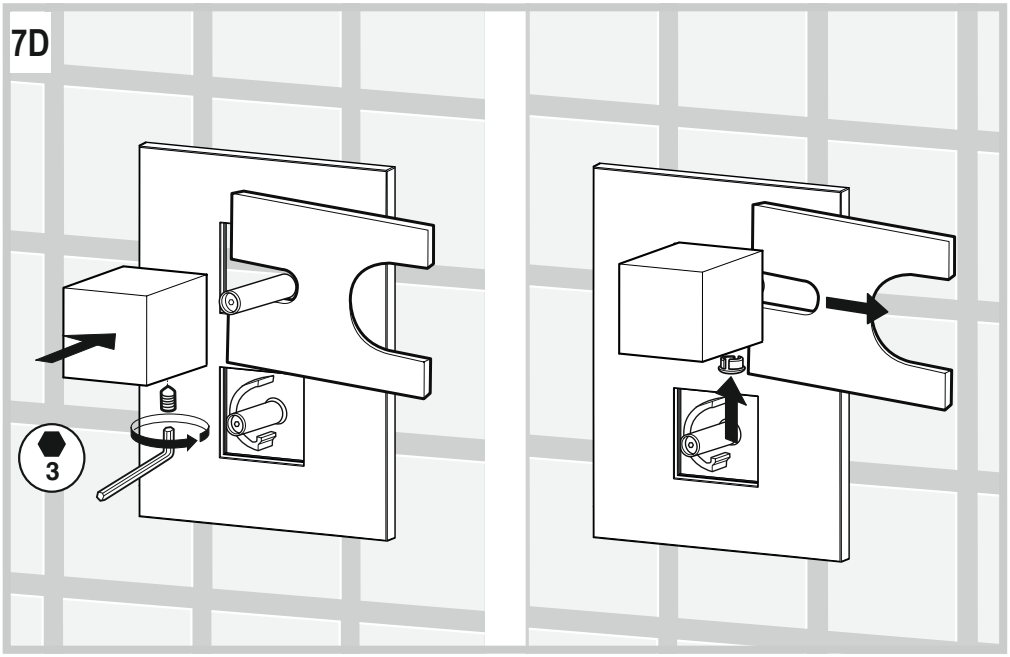

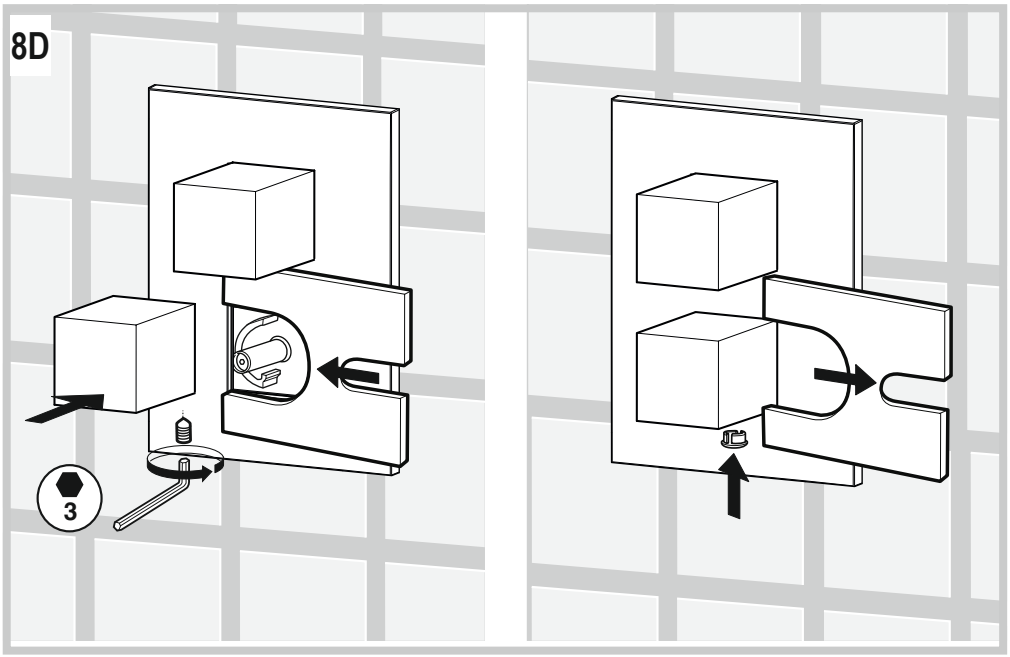

5

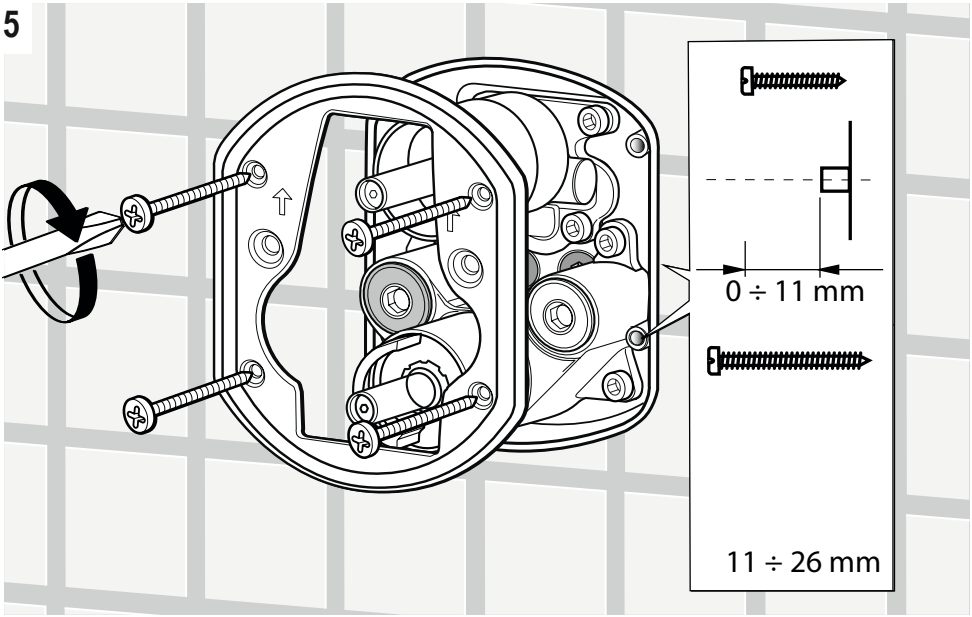

6E

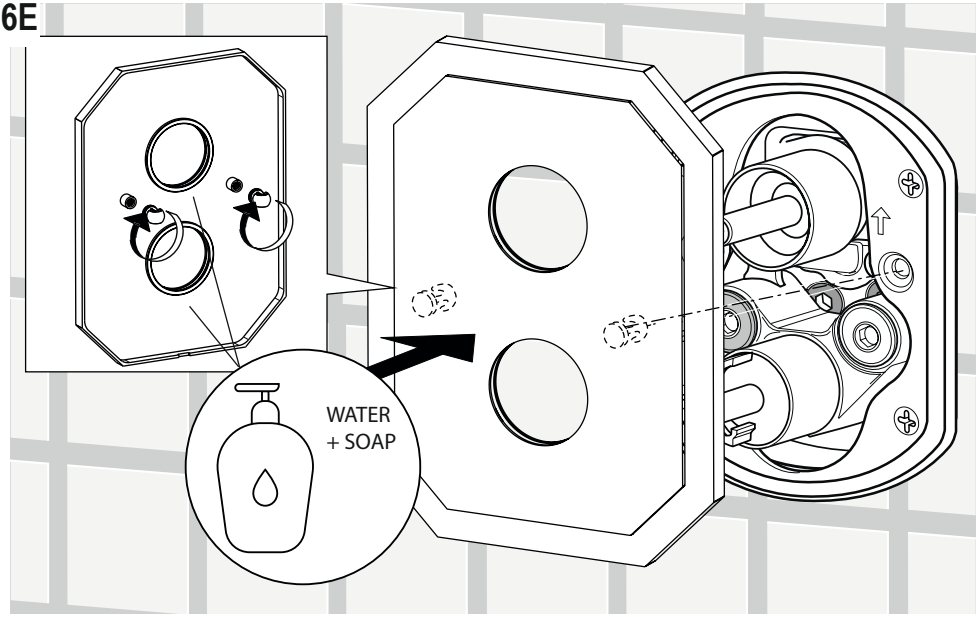

INSTALLATION

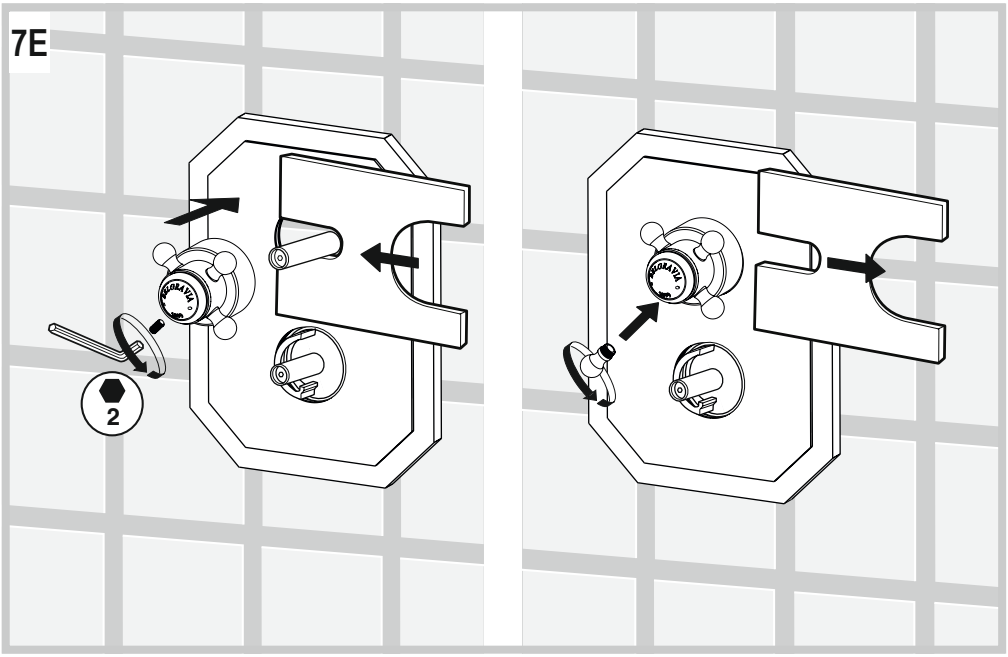

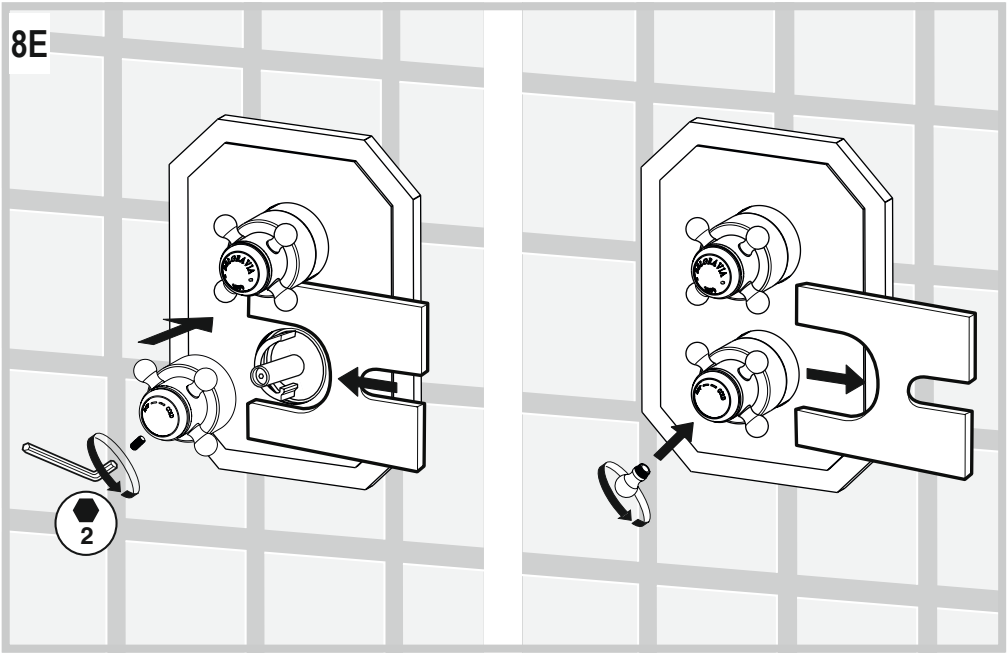

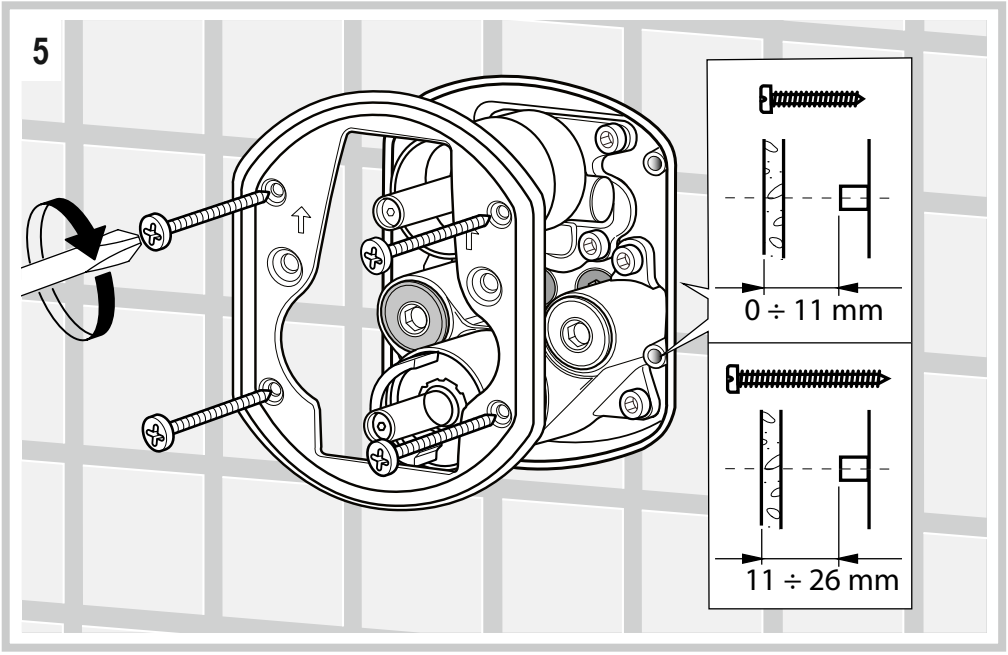
5
0 ÷ 11 mm
11 ÷ 26 mm

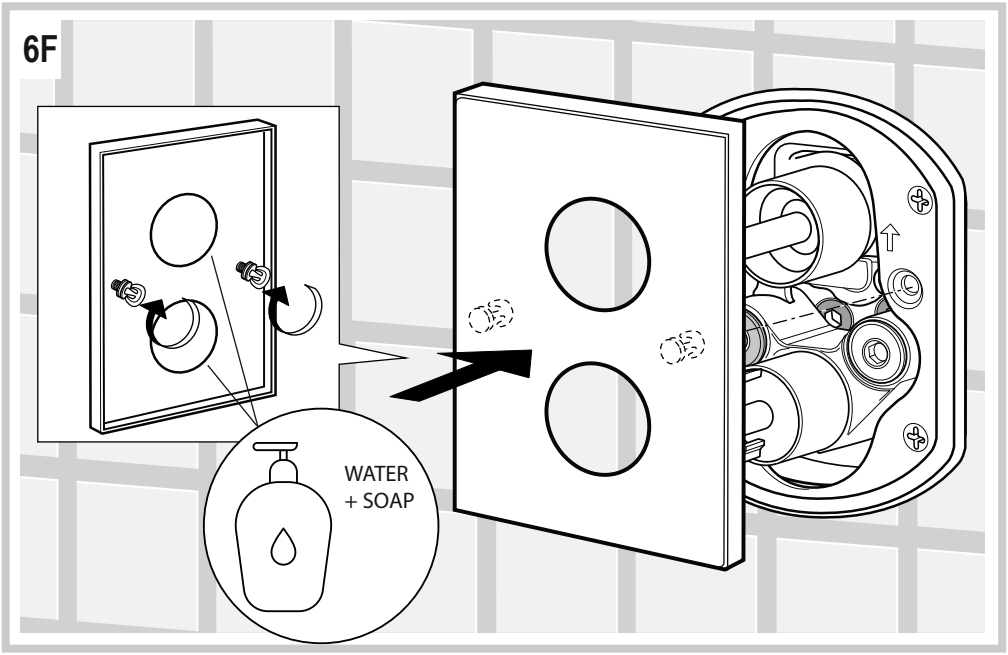
6F
WATER
+ SOAP

INSTALLATION

7F

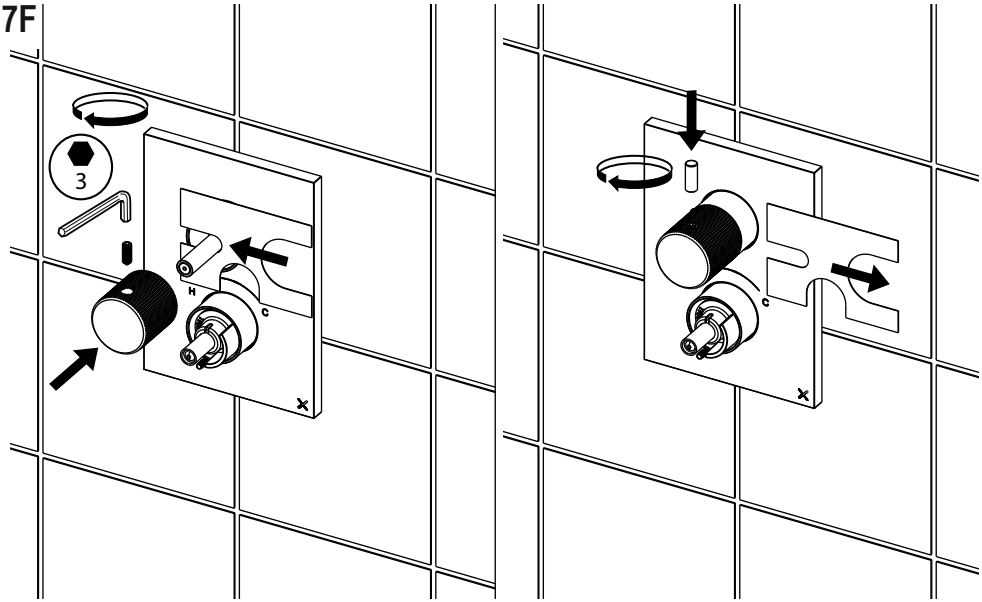

8F

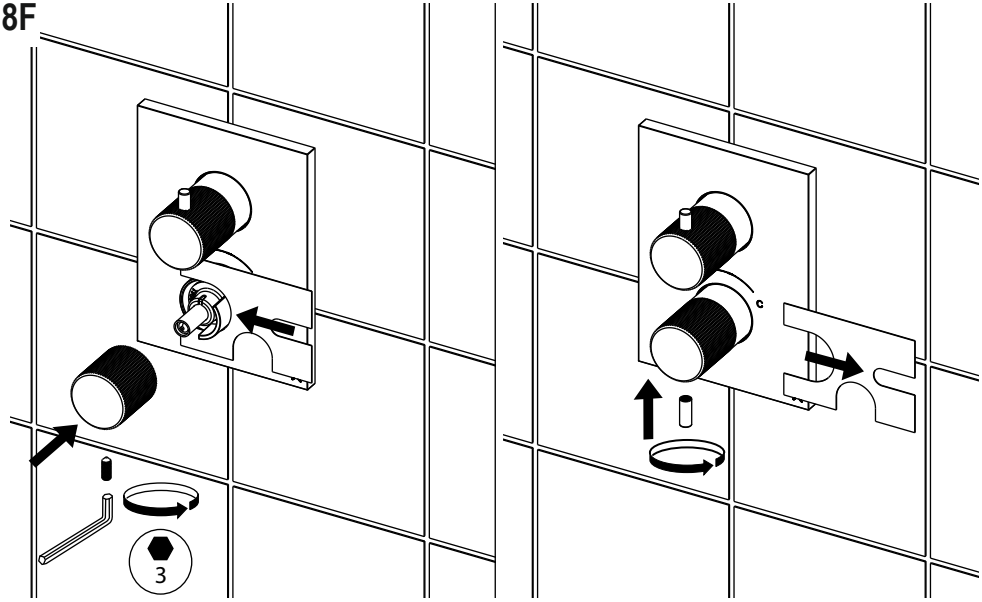

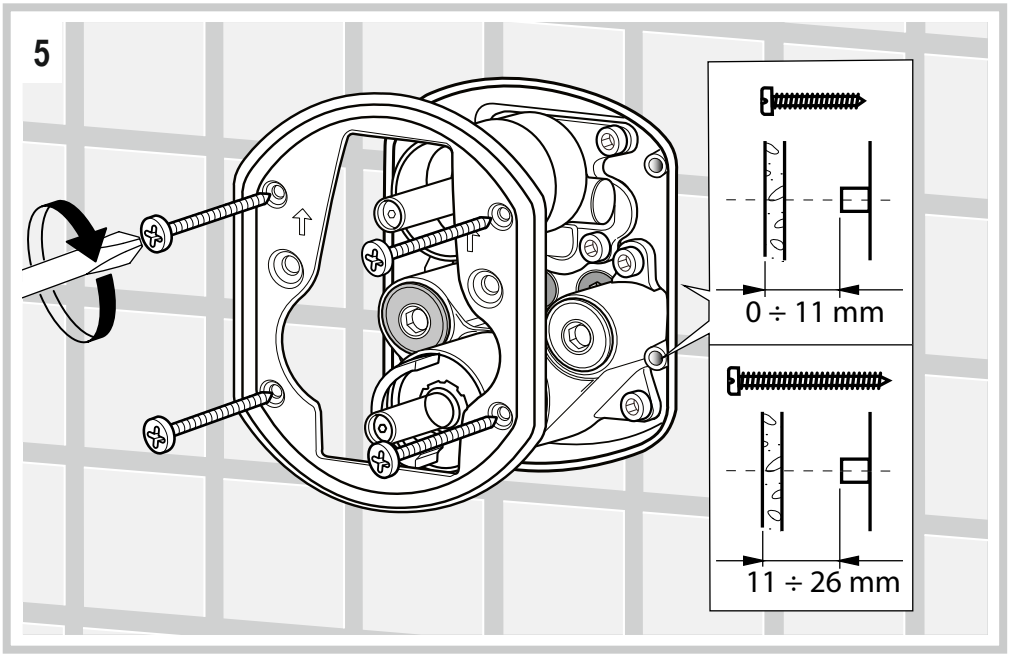
5
0 ÷ 11 mm
11 ÷ 26 mm

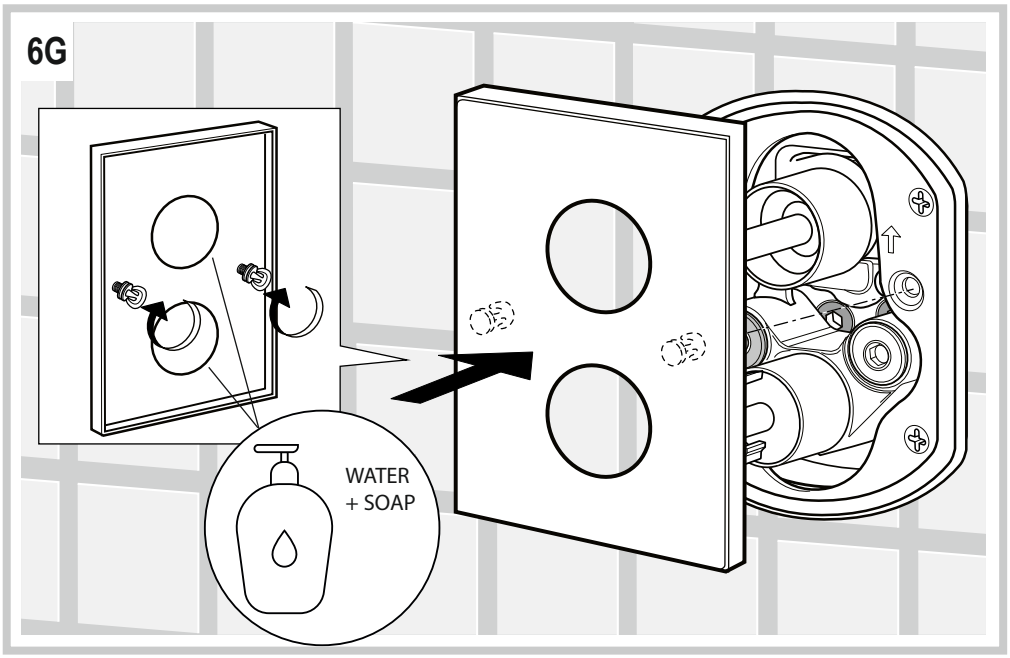
6G
WATER
+ SOAP

INSTALLATION

7G

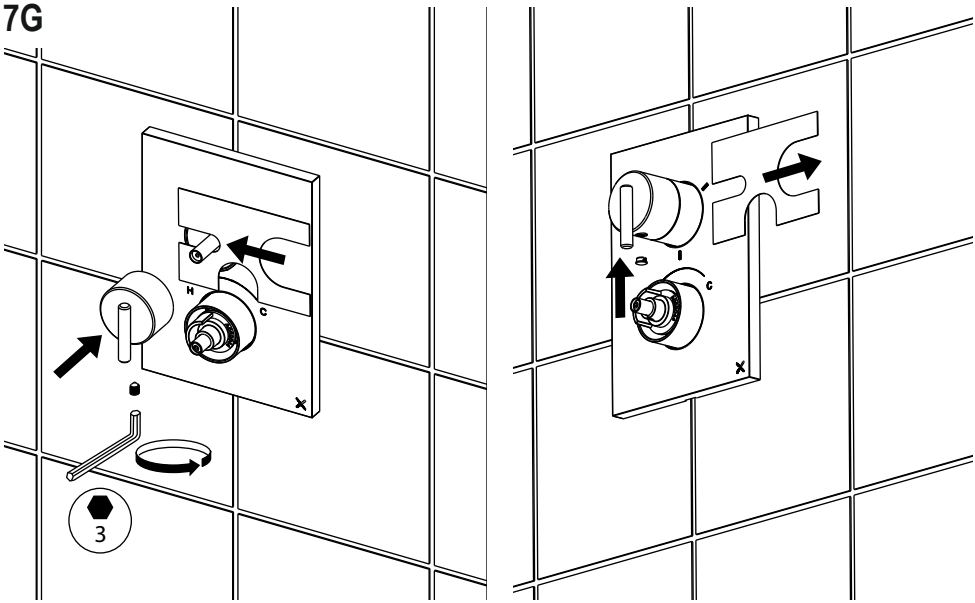

8G

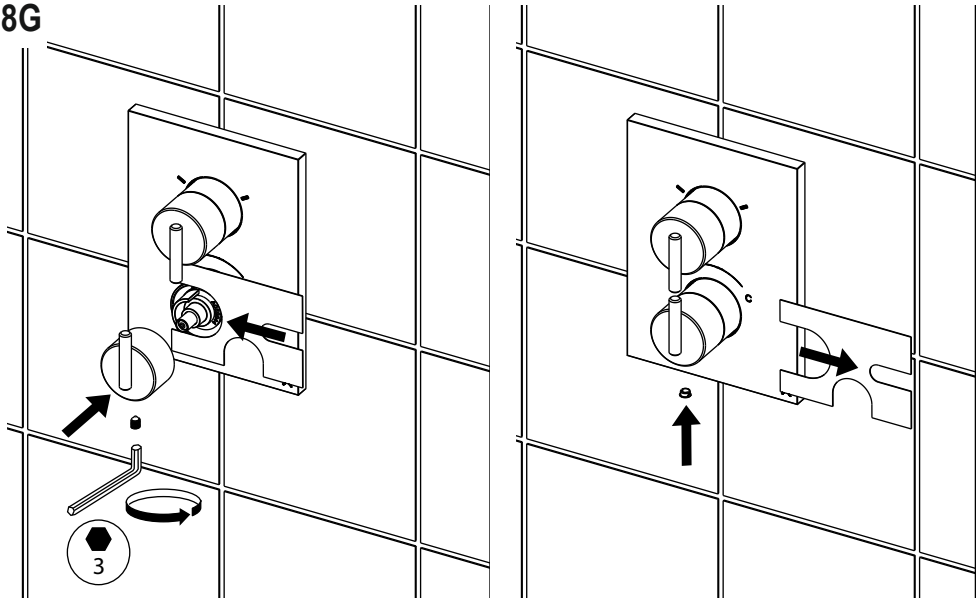

MAINTENANCE

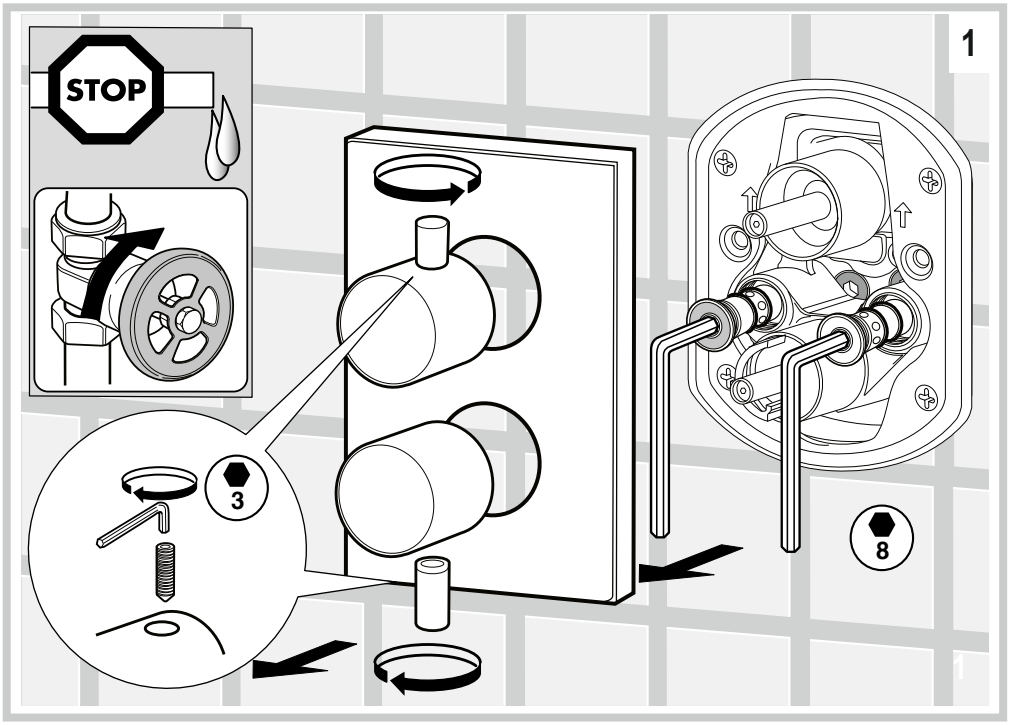

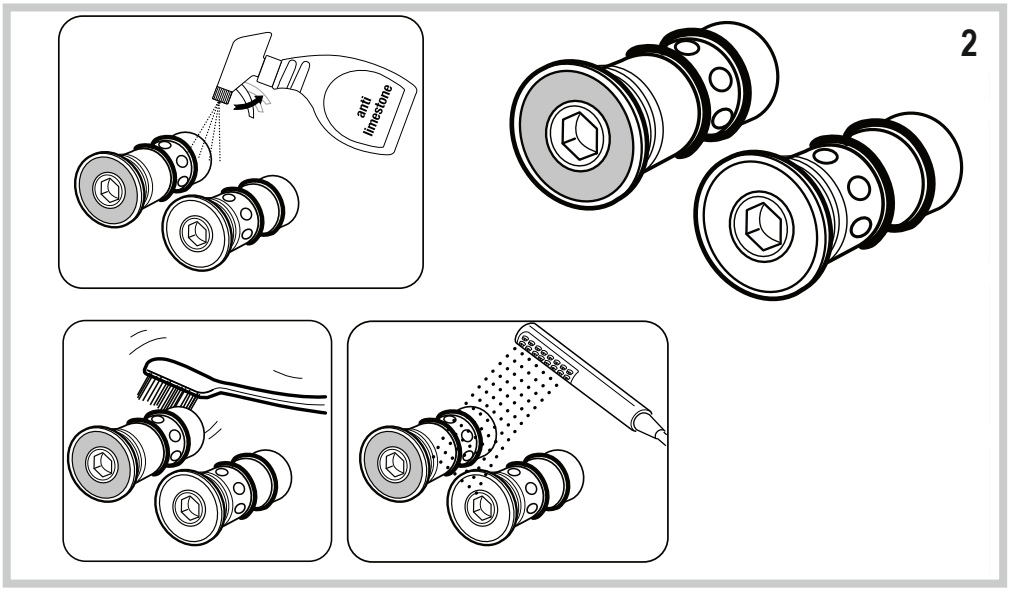

MAINTENANCE

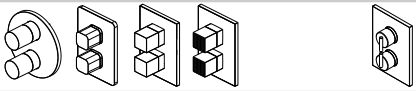

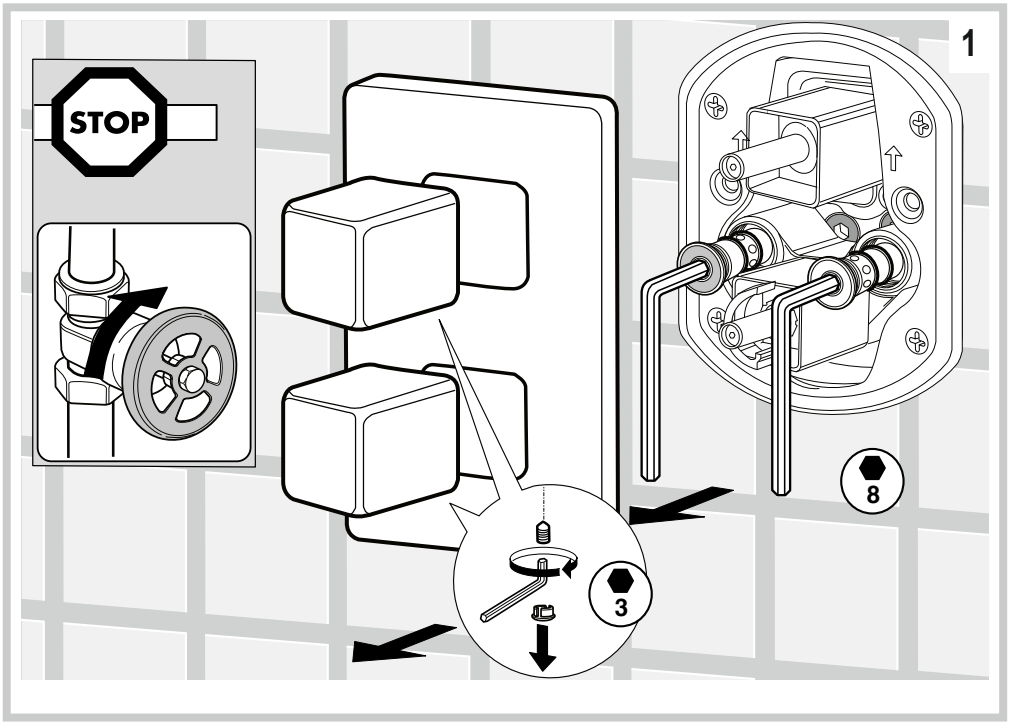

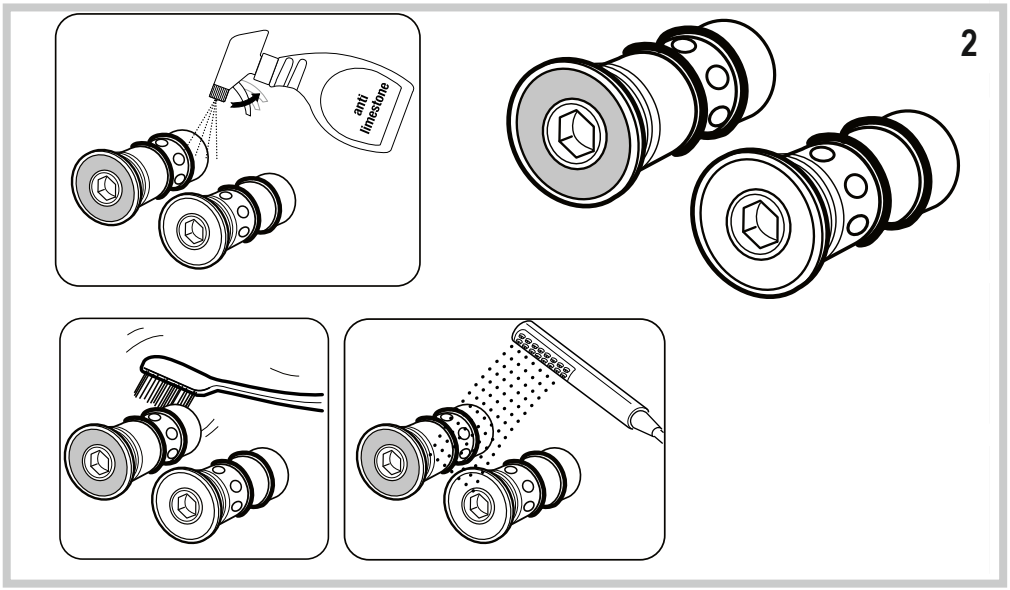

MAINTENANCE

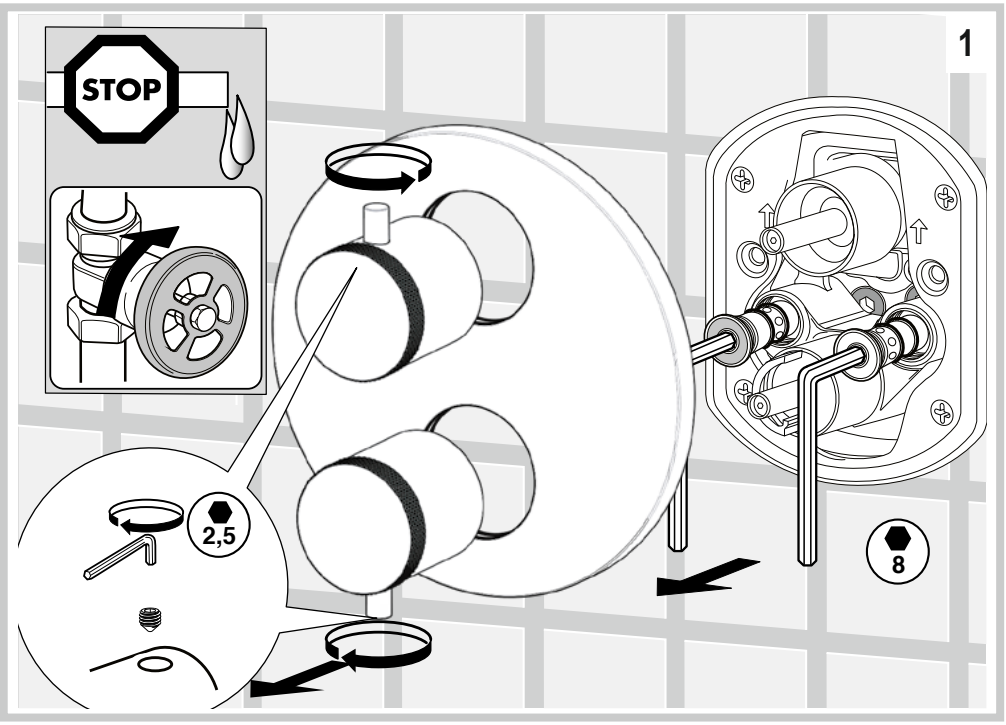

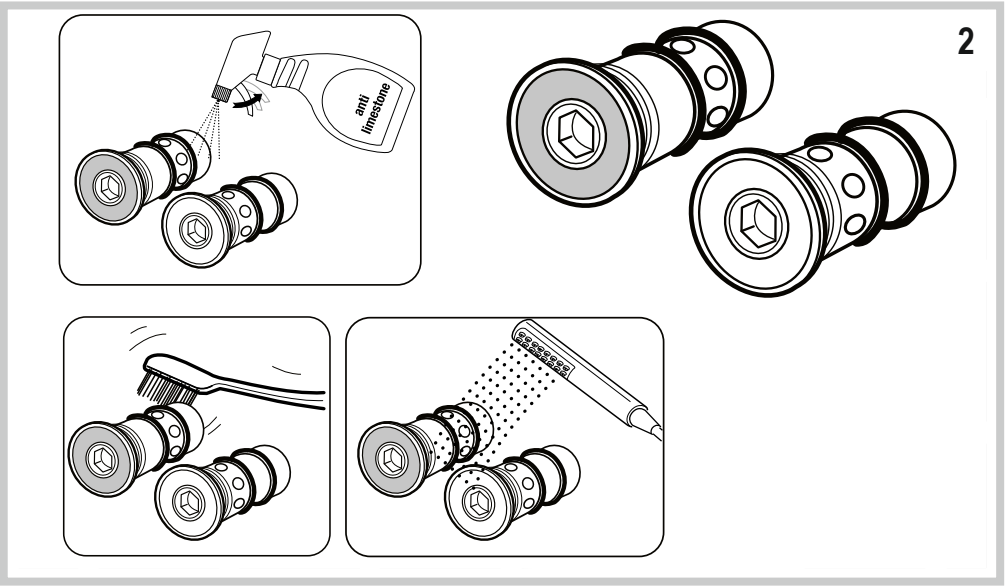

MAINTENANCE

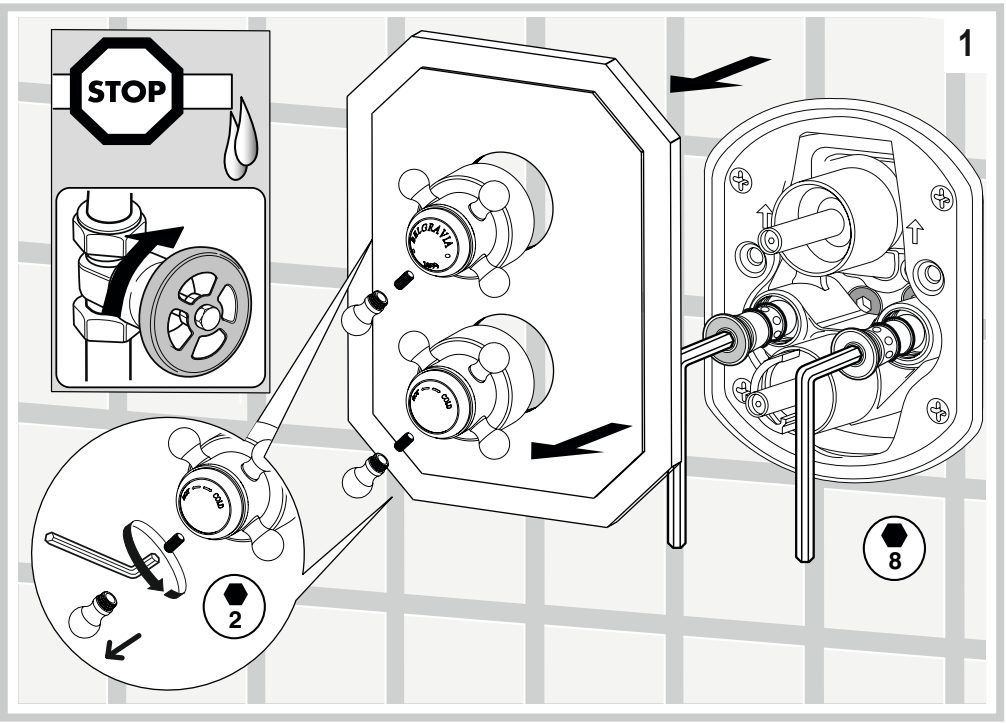

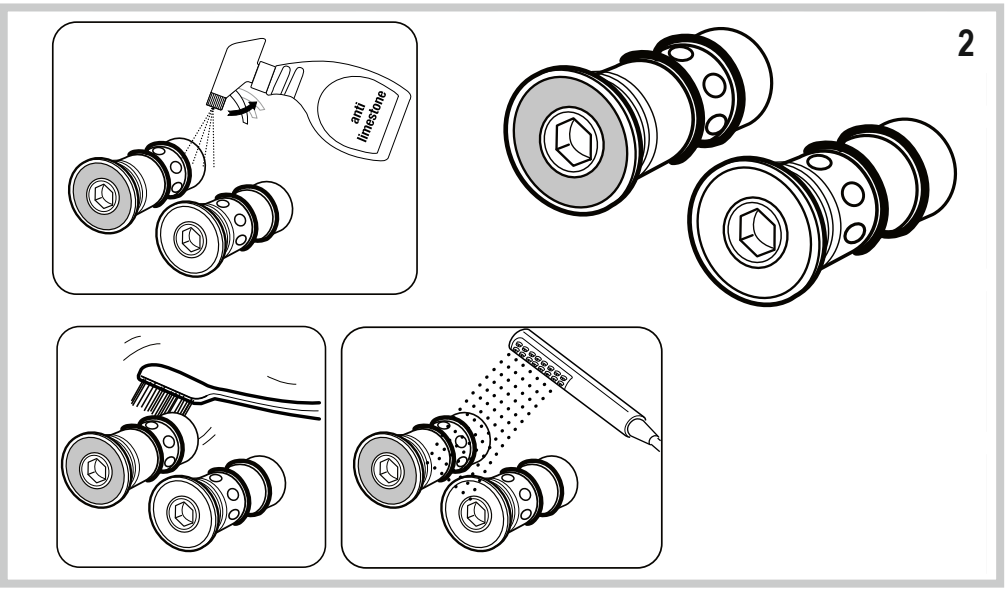

THERMOSTATIC 1 WAY

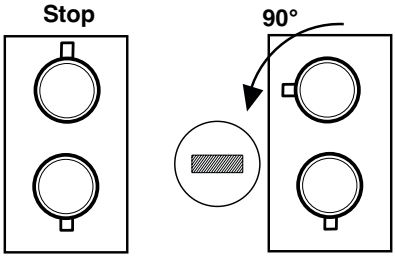

THERMOSTATIC 2 WAYS

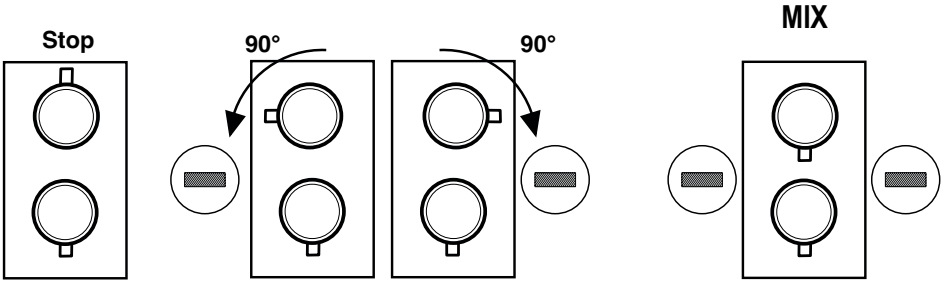

THERMOSTATIC 3 WAYS

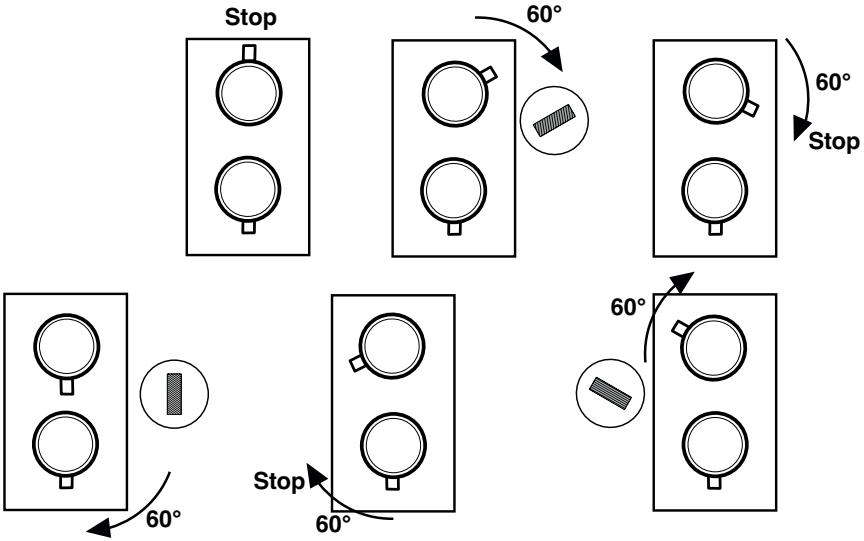

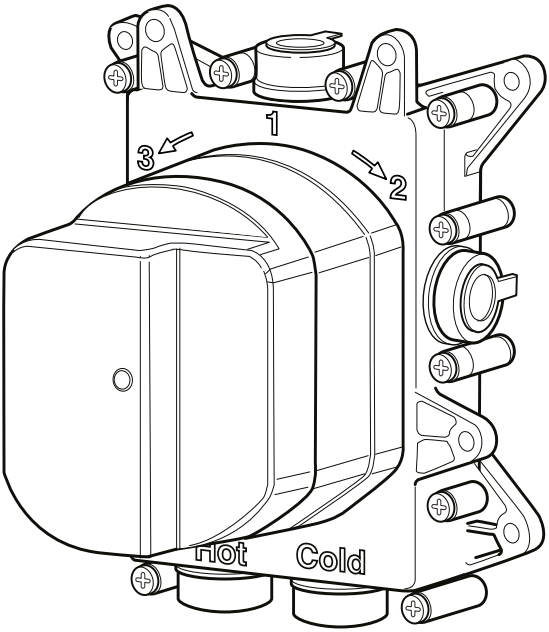

Concealed Box

Mounting Instructions

1 PACKAGE CONTENT

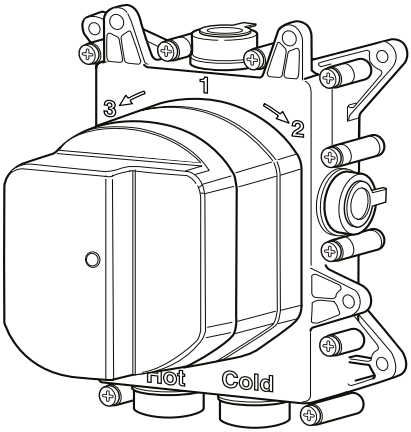

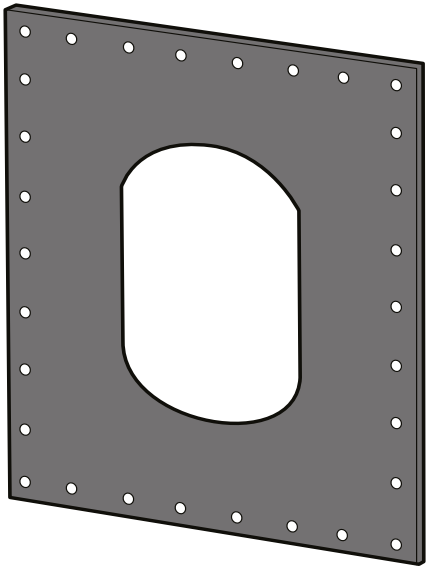

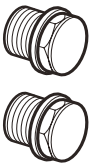

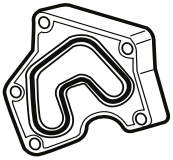

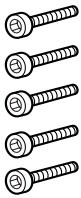

Mounting instructions

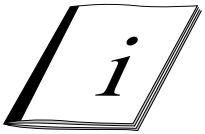

2 TECHNICAL FEATURES

Pressure range min/max 0,5/5 bar
(in case of water pressure highter than 5 bar weeracommend installing pressure reducers).
Recommended pressure 3 bar.

Operation:
Either with gas or electric accumulation boilers.
Centralised systems.

Safety lock at:	41° C
Min. Working temperature:	3° C
Min. recommended:	15° C
Max. Working temperature:	70° C
Max. recommended:	65° C
Recommended thermal differential	50° C

Thermal disinfection is allowed.

Safety system with flow stop in case of lack of one of the two waters.

Warning: contact the plumber for the choice of the best water heating device.

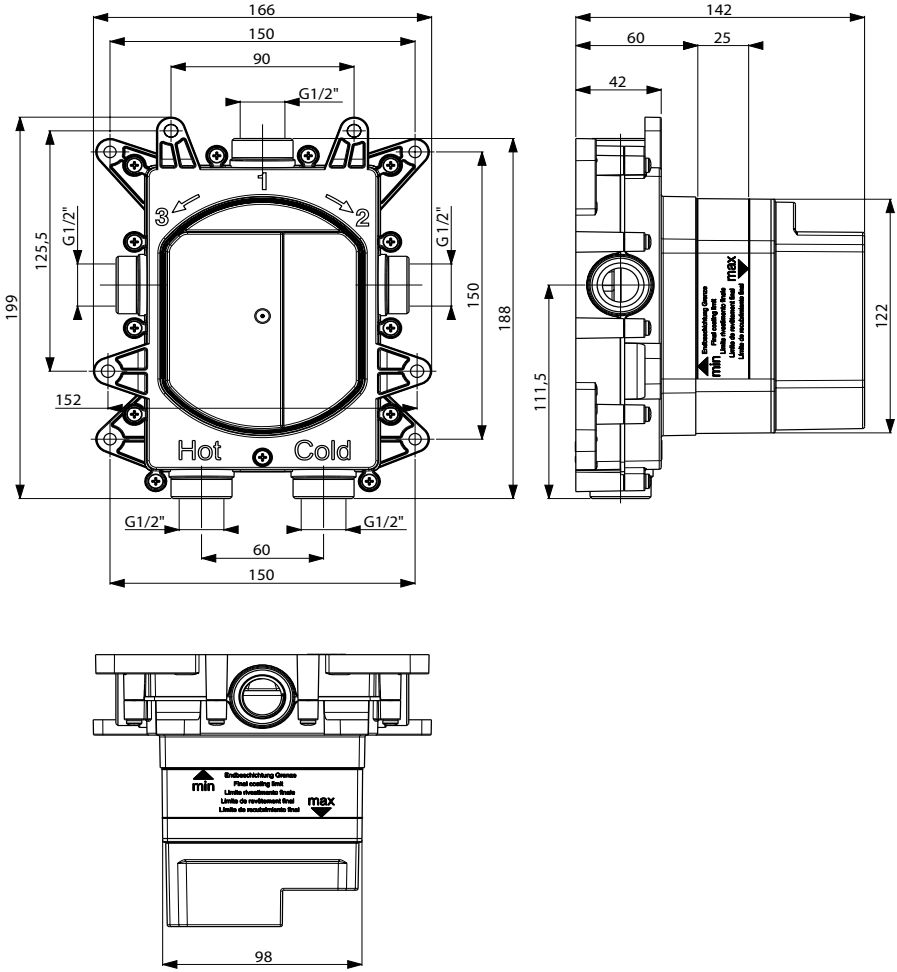
166
150
90
G1/2"
1
2
3
G1/2"
G1/2"
125,5
199
150
188
152
Hot
Cold
G1/2"
G1/2"
60
150
142
60
25
42
111,5
122
min
max
Endbeschichtung Grenze
Final coating limit
Limite rivestimento finale
Límite de revestimiento final
Limite de revêtement final
98

Press.	FLOW RATE (L/min)			
	Push button 2 ways			
	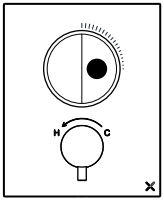 Exit 1		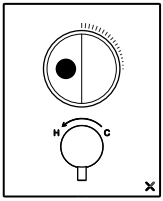 Exit 2	
bar	min.	max.	min.	max.
0,5	1,5	7,5	1,5	7,5
1	2,3	11,3	2,3	11,2
2	3,5	16,5	3,5	16
3	4,5	20,5	4,5	20
4	5,5	23,7	5,2	22,8
5	5,7	26,5	5,7	25,5

Press.	FLOW RATE (L/min)					
	Push button 3 ways					
	Exit 1		Exit 2		Exit 3	
bar	min.	max.	min.	max.	min.	max.
0,5	1,8	8,1	1,8	7,7	1,8	7,7
1	2,7	11,8	2,6	11,5	2,6	11,5
2	3,9	16,8	3,9	16,7	3,9	16,7
3	4,8	20,7	4,8	20,5	4,8	20,5
4	5,5	24	5,5	23,7	5,5	23,7
5	6,2	26,7	6,2	26,6	6,2	26,6

2 WAYS - ONLY PUSH VERSION

ATTENTION:
indications valid only for PUSH VERSION!

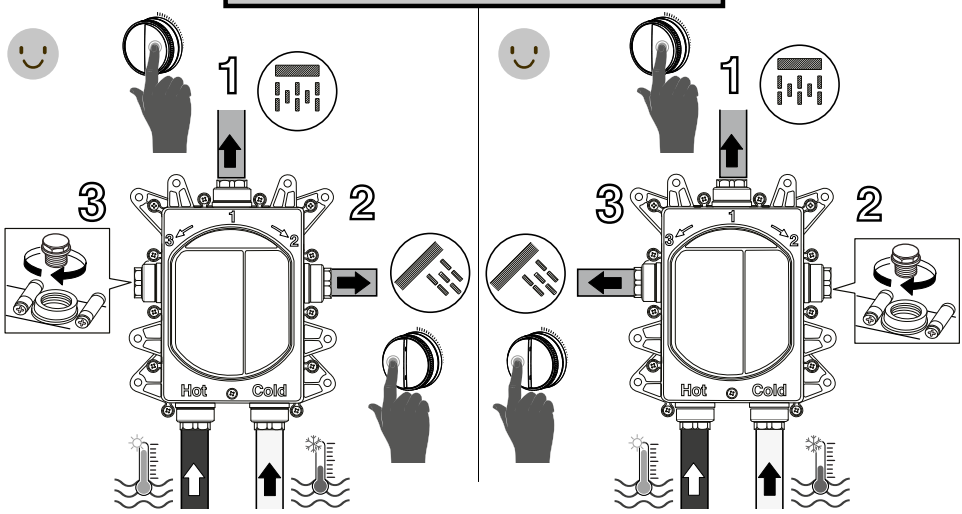

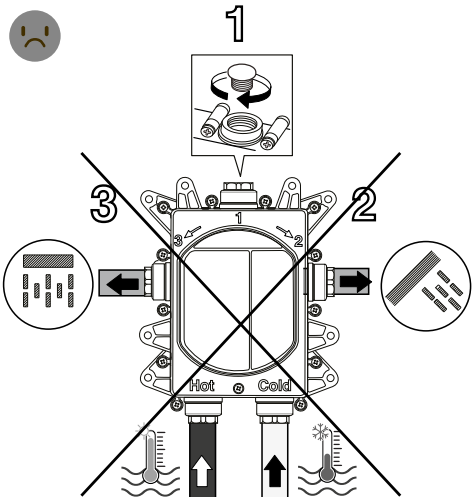

3 WAYS - ONLY PUSH VERSION

ATTENTION:
indications valid only for PUSH VERSION!

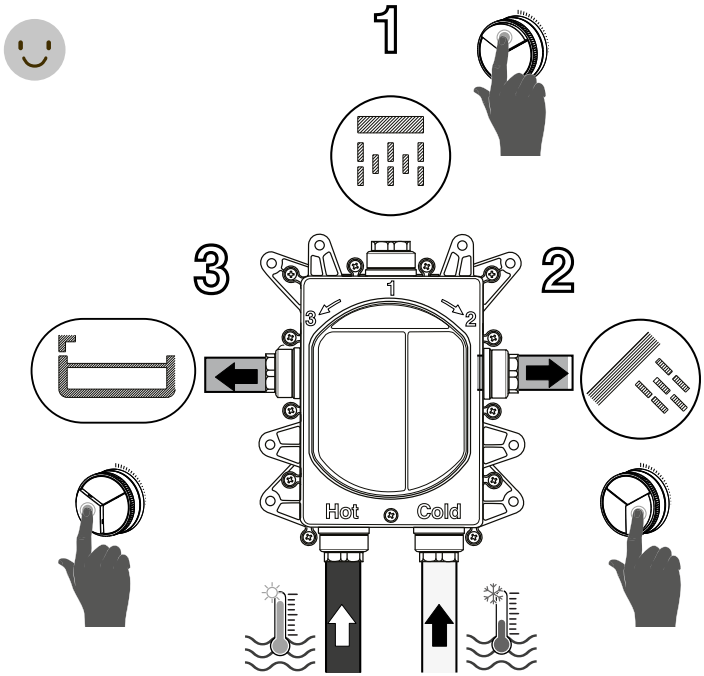

Press.	FLOW RATE (L/min)			
	Term. 1 way	Term. 2 way		
bar	Exit 1/2/3	Exit 2	Exit 3	Mix
0,5	8,2	8,2	8,2	9,2
1	11,7	11,7	11,7	13,2
2	16,7	16,4	16,4	18,7
3	20,7	20	20	22,9
4	24	23	23	26,4
5	26,6	25,8	25,8	29,5

Press.	FLOW RATE (L/min)		
	Term. 3 ways		
bar	Exit 1	Exit 2	Exit 3
0,5	9,4	8,1	8,1
1	13,4	11,6	11,6
2	19,2	16,6	16,6
3	23,7	20,5	20,5
4	27,4	23,8	23,8
5	30,5	26,6	26,6

PRE-INSTALLATION INFORMATIONS

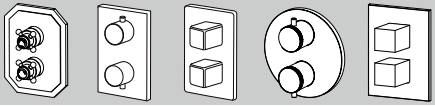

ATTENTION:
indications valid only for OTHER VERSIONS!

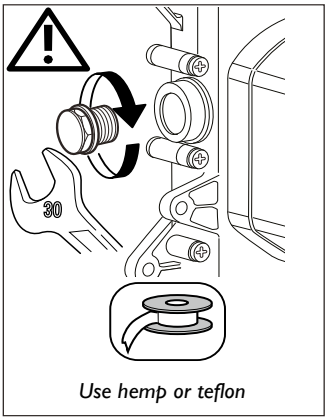

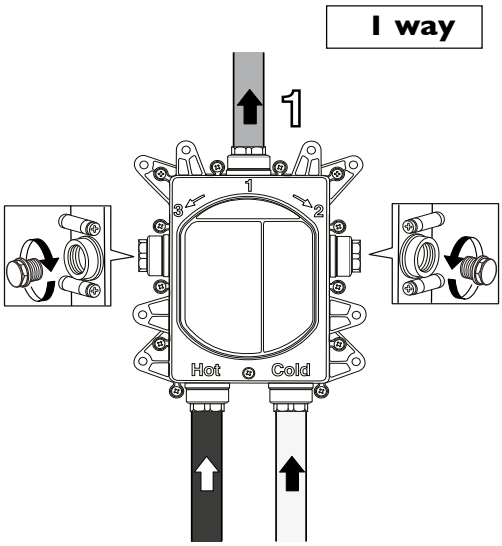

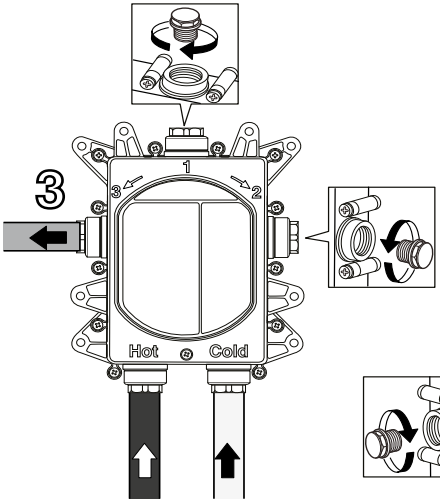

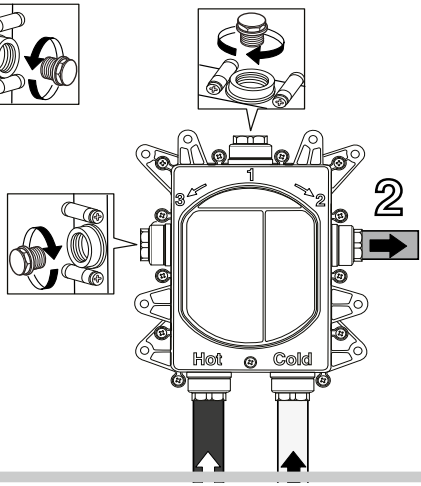

PRE-INSTALLATION INFORMATIONS

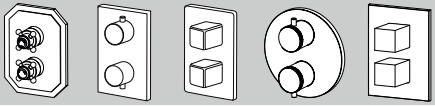

ATTENTION:
indications valid only for OTHER VERSIONS!

2 ways

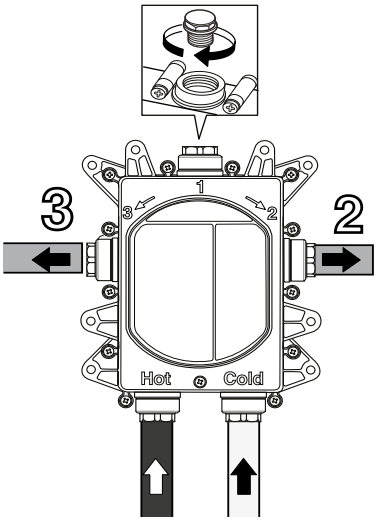

3 ways

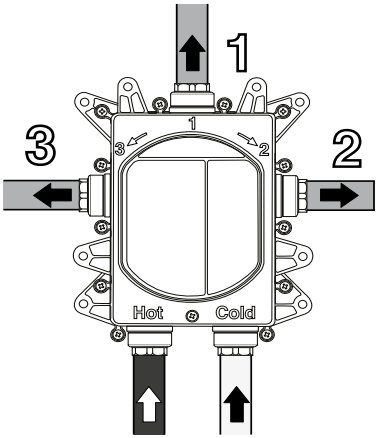

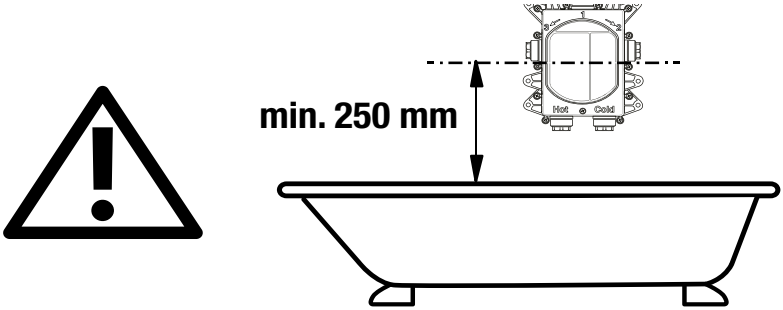
min. 250 mm
Hot
Cold

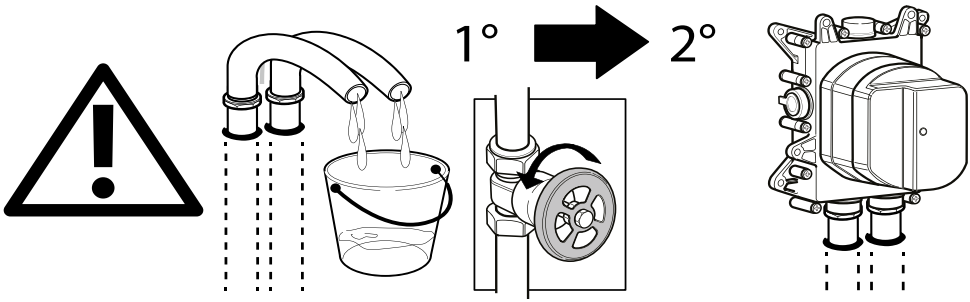
1°
2°

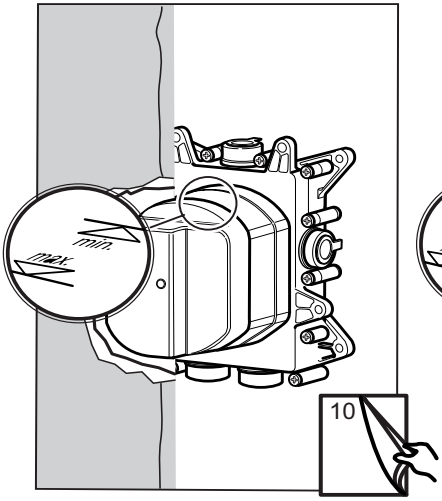

Mounting on plasterboard wall

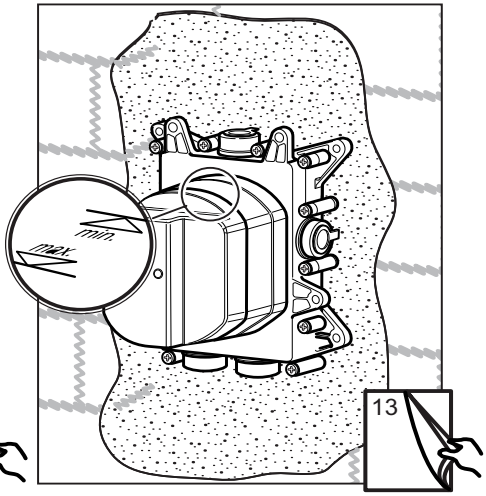

Wall mounting

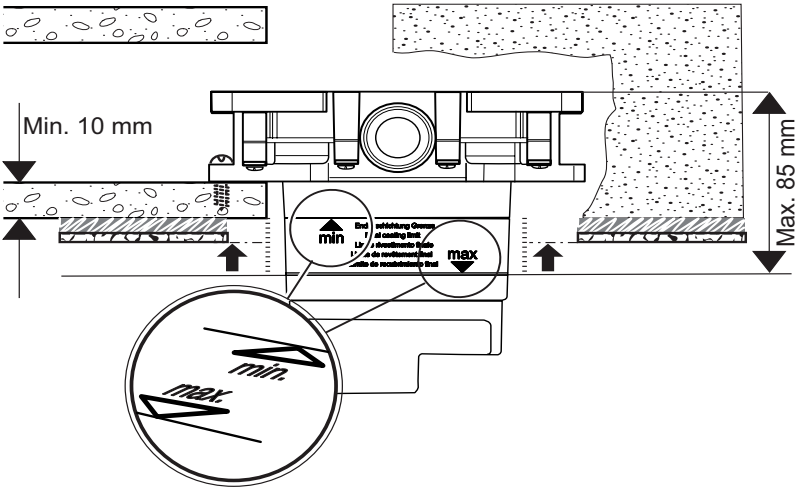

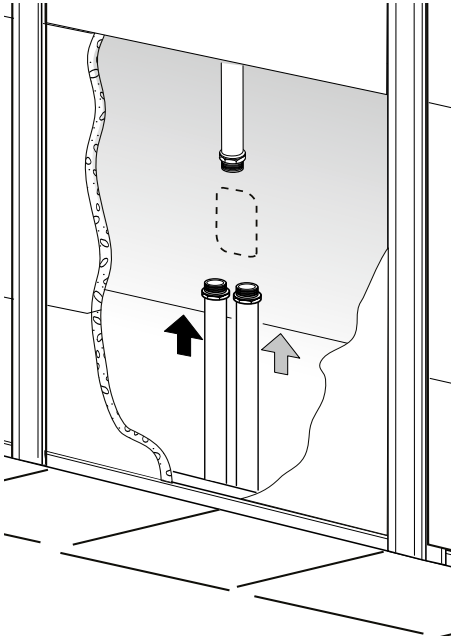

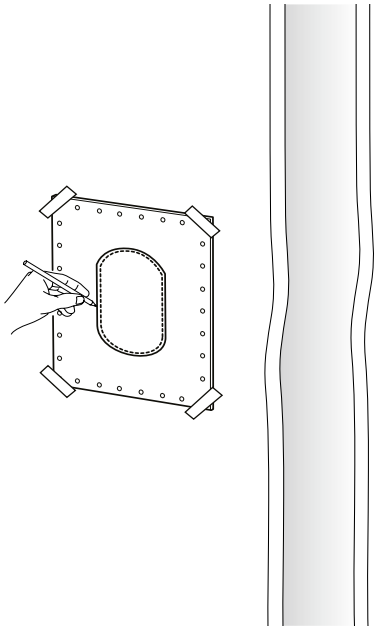

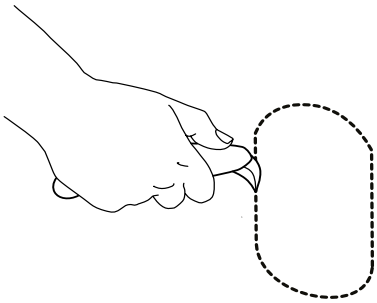

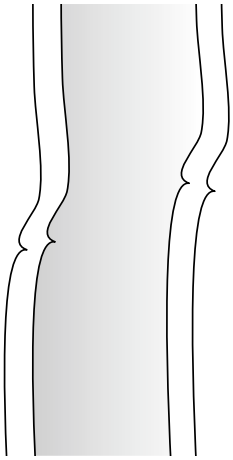

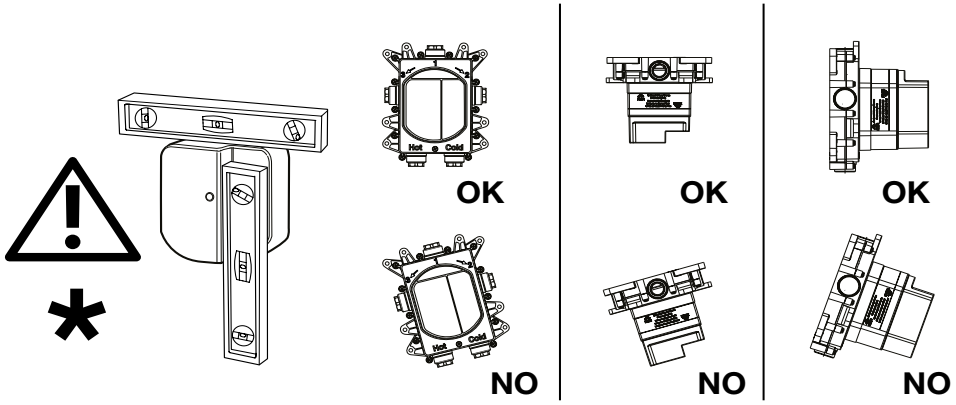
Hot
Cold
OK
OK
OK
Hot
Cold
NO
NO
NO

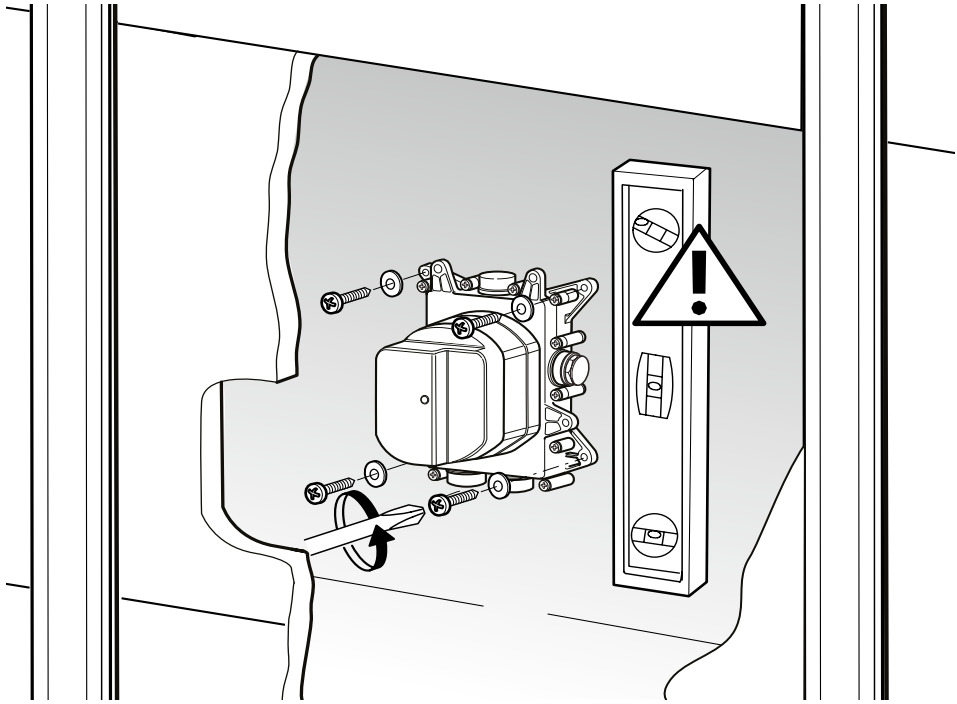

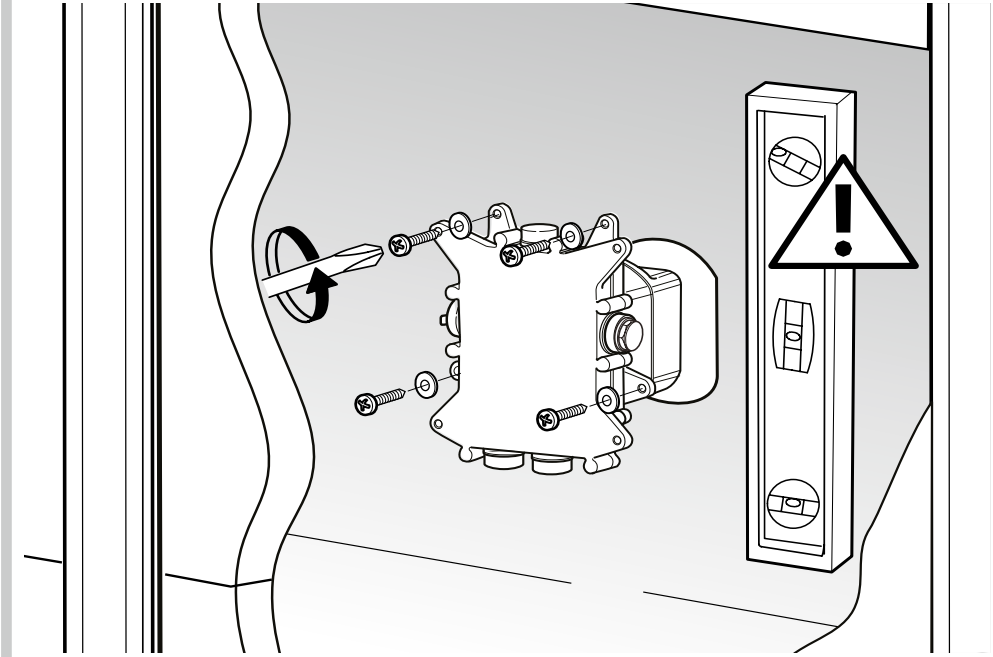

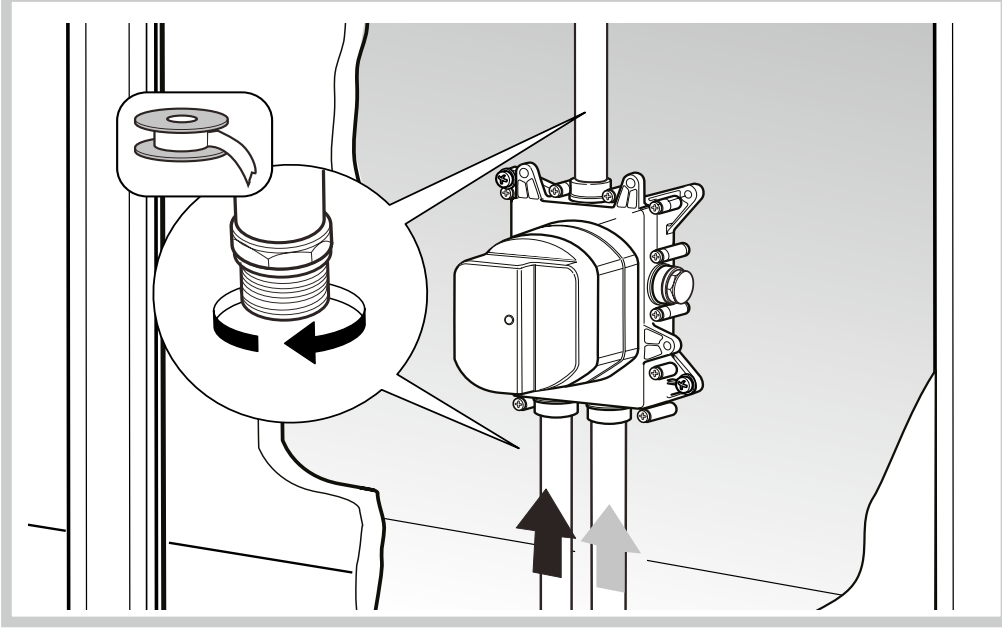

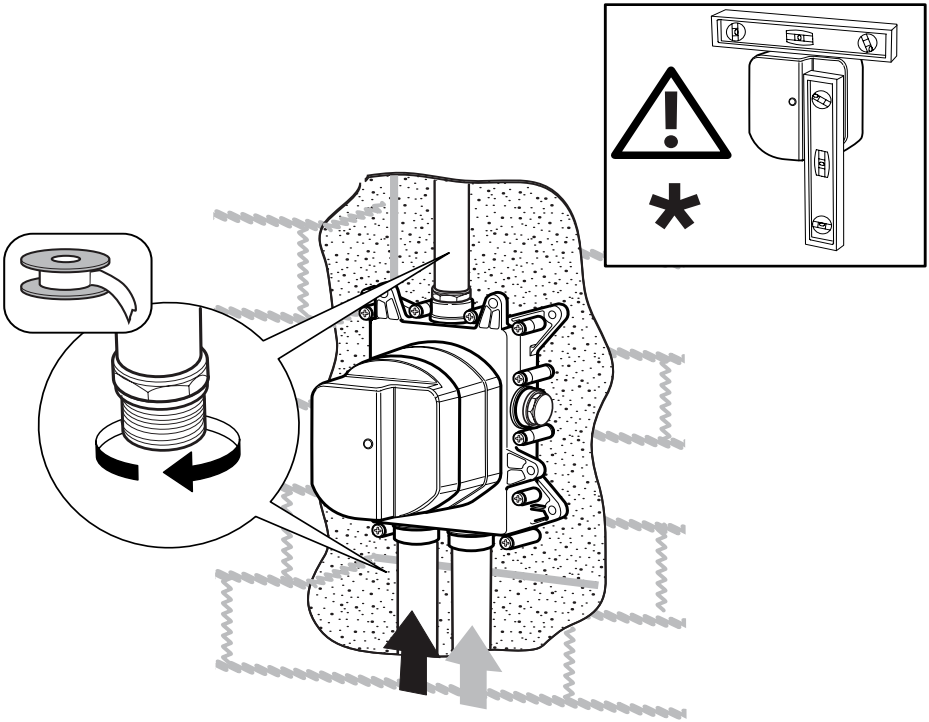

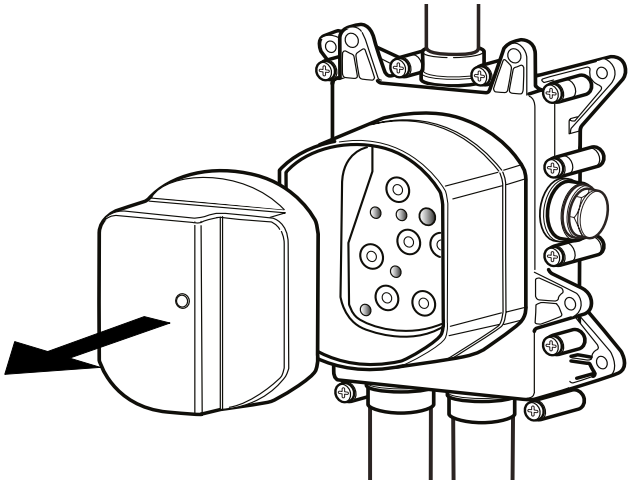

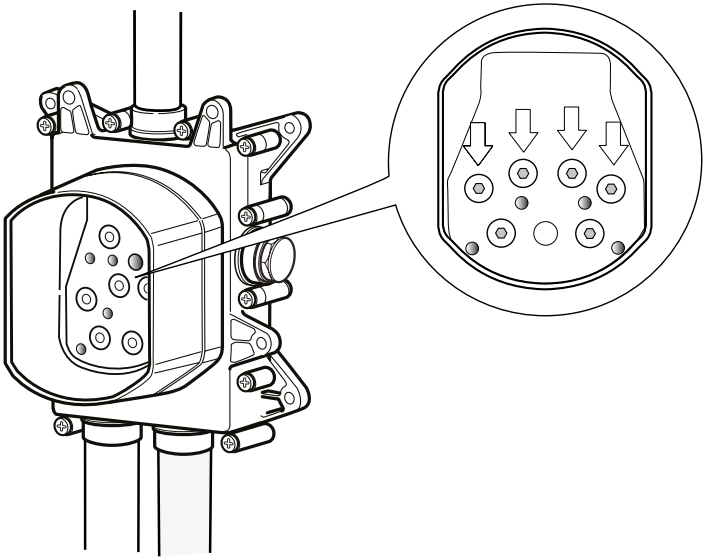

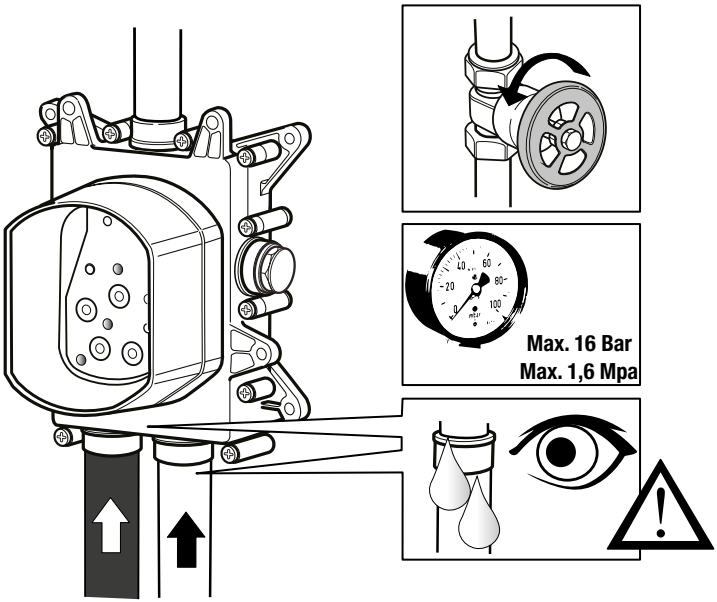
Max. 16 Bar
Max. 1,6 Mpa

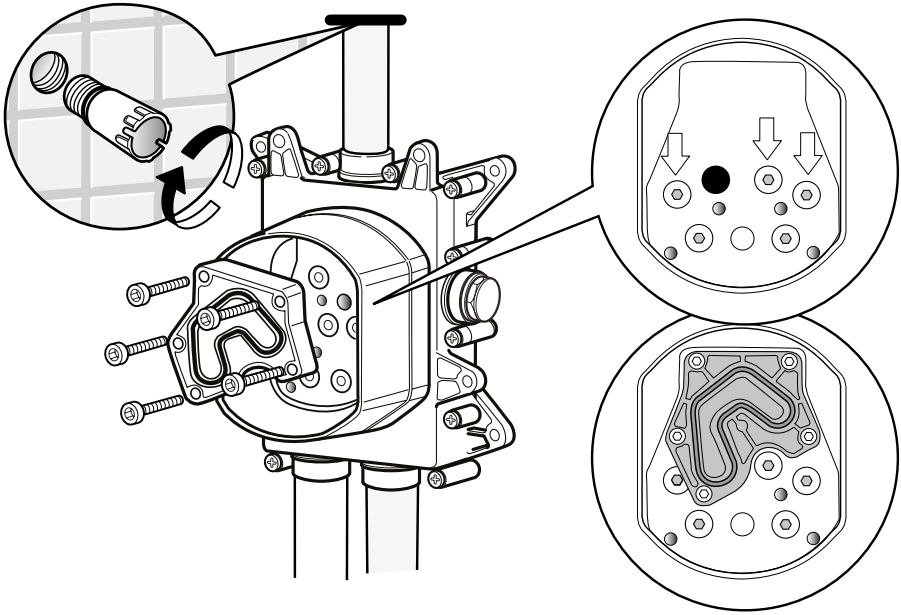

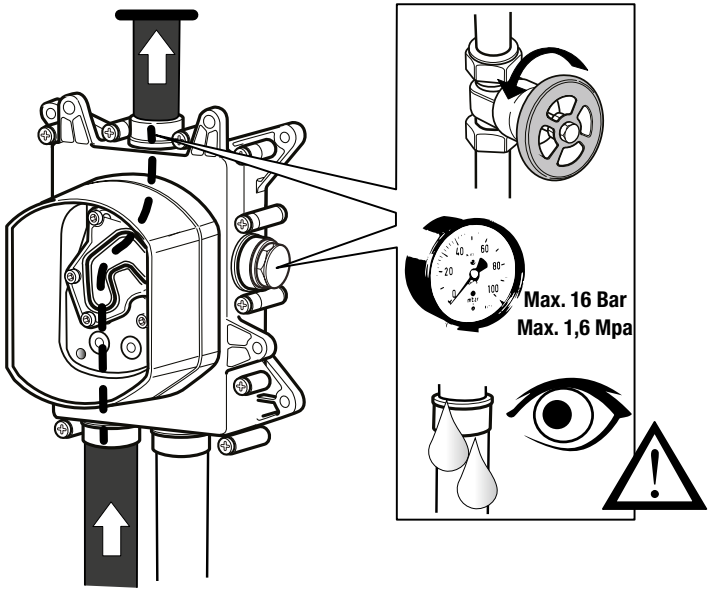
Max. 16 Bar
Max. 1,6 Mpa

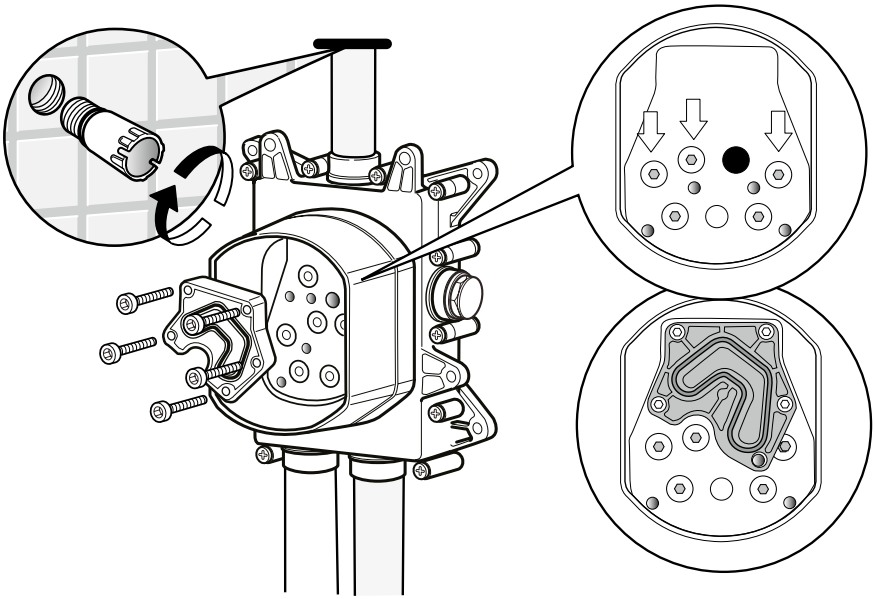

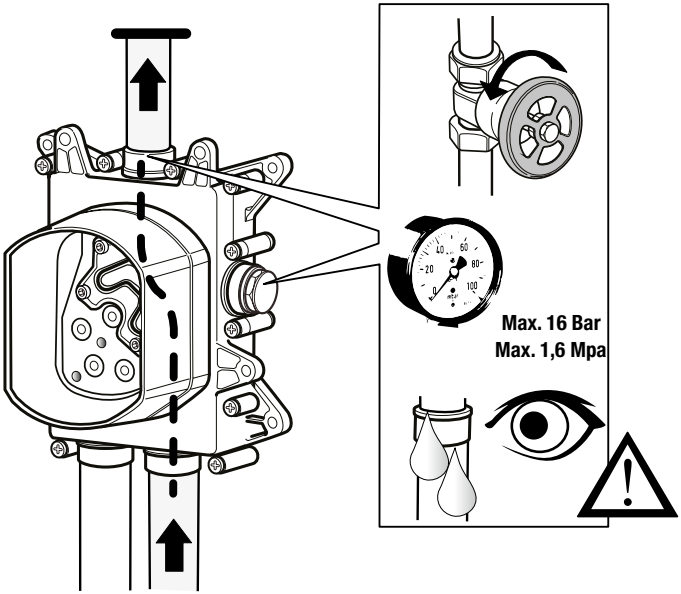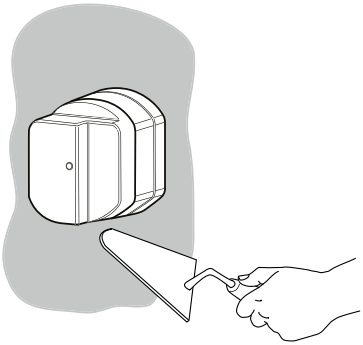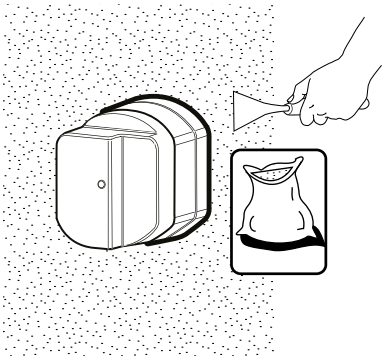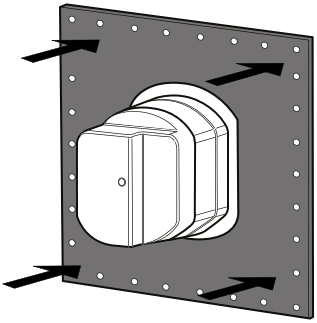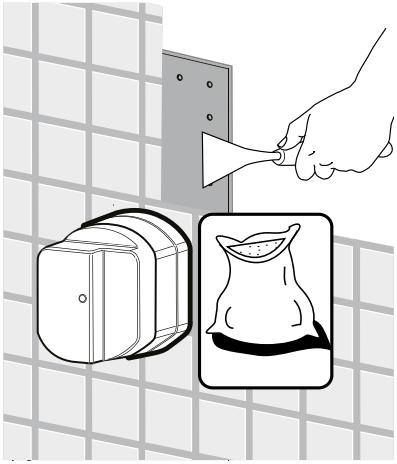
Max. 16 Bar
Max. 1,6 Mpa