UNIVERSAL SHOWER ASSORTMENT LIBERTY

PRODUCT INFORMATION

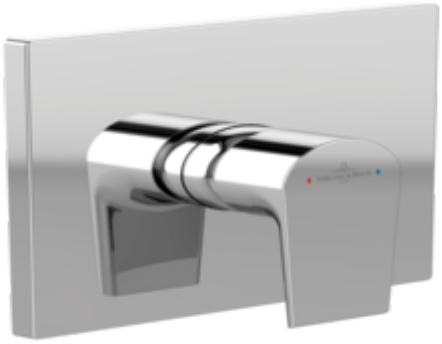

Article title	Villeroy & Boch Liberty Concealed single-lever bath / shower mixer, Chrome
Article number	TVS10700400061
Assembly / Assembly type	wall-mounted
Scope of delivery	1 x tap fitting , 1 x installation instructions
Length in mm	54
Width in mm	150
Height in mm	150
Collection	Liberty
Weight in kg	1.414
Material	Brass
Surface	glossy
Colour name	Chrome
EAN number	4062373673881
Model number	TVS107004000
Material	Brass
Volume	6,552
Swivel aerator	No
Thermostat	No
Cool Tap	No

COLOURS

Colour	Description	Article number	EAN
	Chrome	TVS10700400061	4062373673881

UNIVERSAL SHOWER ASSORTMENT LIBERTY

TECHNICAL DRAWINGS

TVS107004000

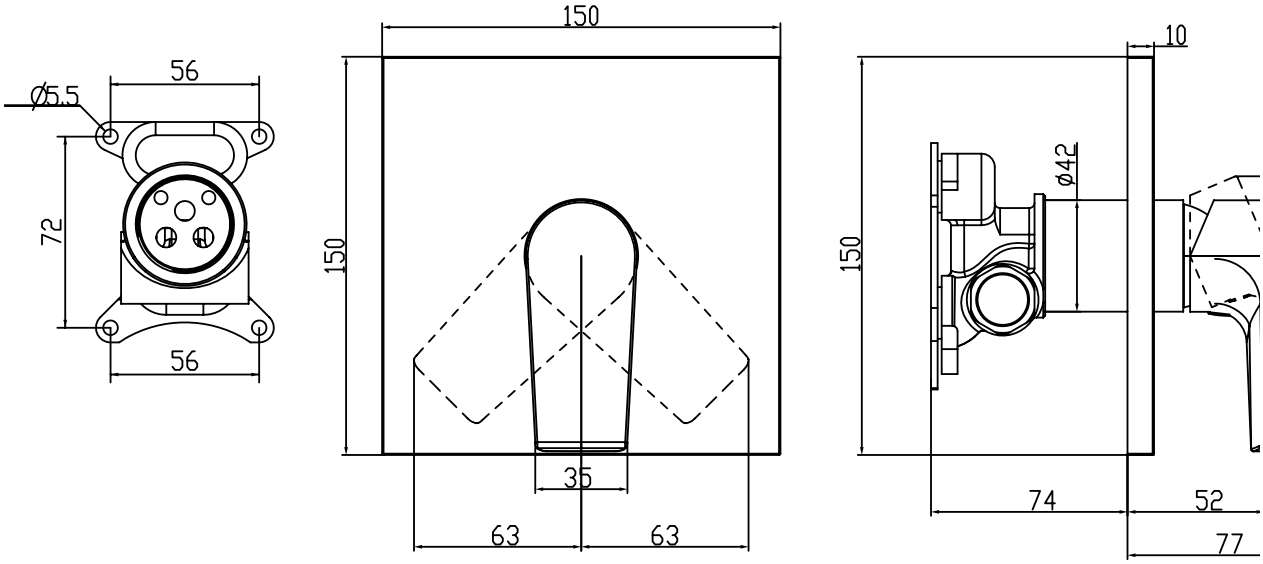

ACCESSORIES UNIVERSAL TAPS & FITTINGS

PRODUCT INFORMATION

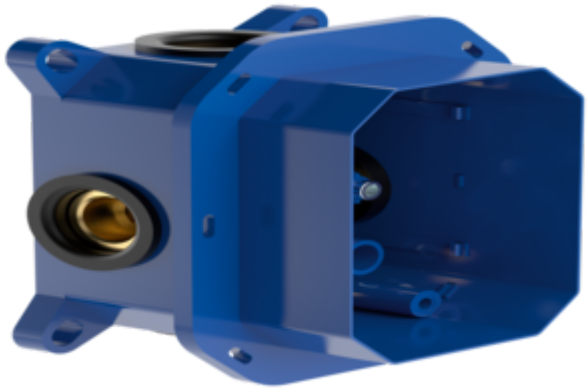

Article title	Villeroy & Boch Universal Taps & Fittings Vi-Box universal concealed installation unit for single-lever mixer
Article number	TVS00035100000
Scope of delivery	1 x fastening , 1 x installation instructions
Length in mm	79
Width in mm	226
Height in mm	259
Collection	Universal Taps & Fittings
Weight in kg	1.138
Material	Plastic
Surface	matt
EAN number	4051202465773
Model number	TVS000351000
Material	Plastic
Volume	4,974
Swivel aerator	No
Thermostat	No
Cool Tap	No

COLOURS

Colour	Description	Article number	EAN
		TVS00035100000	4051202465773