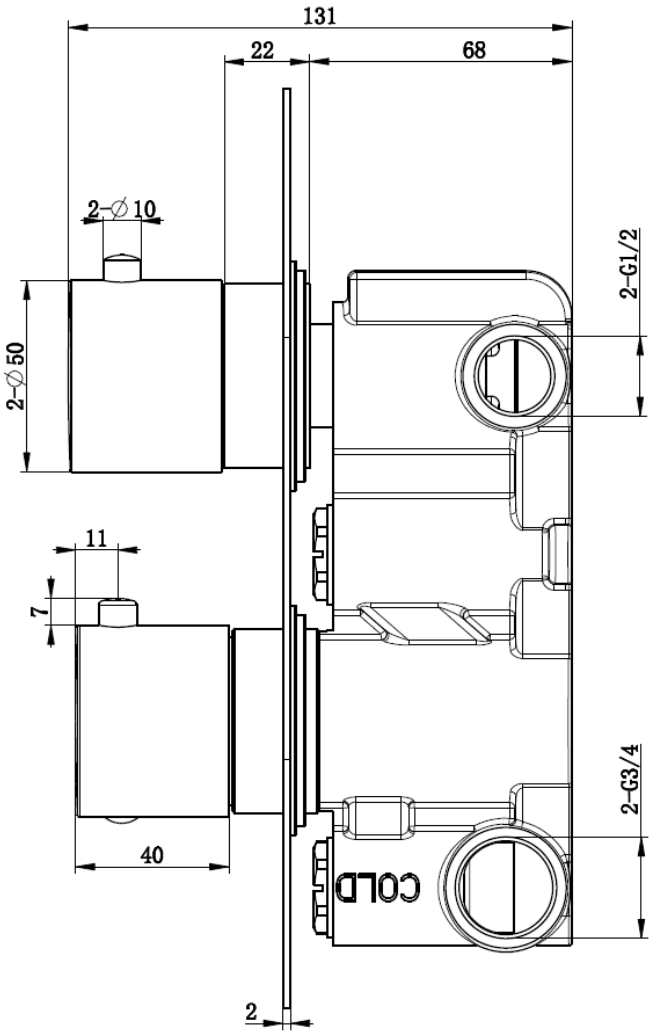
131
22
68
2-∅10
2-∅50
11
7
40
2
2-G1/2
2-G3/4
COLD

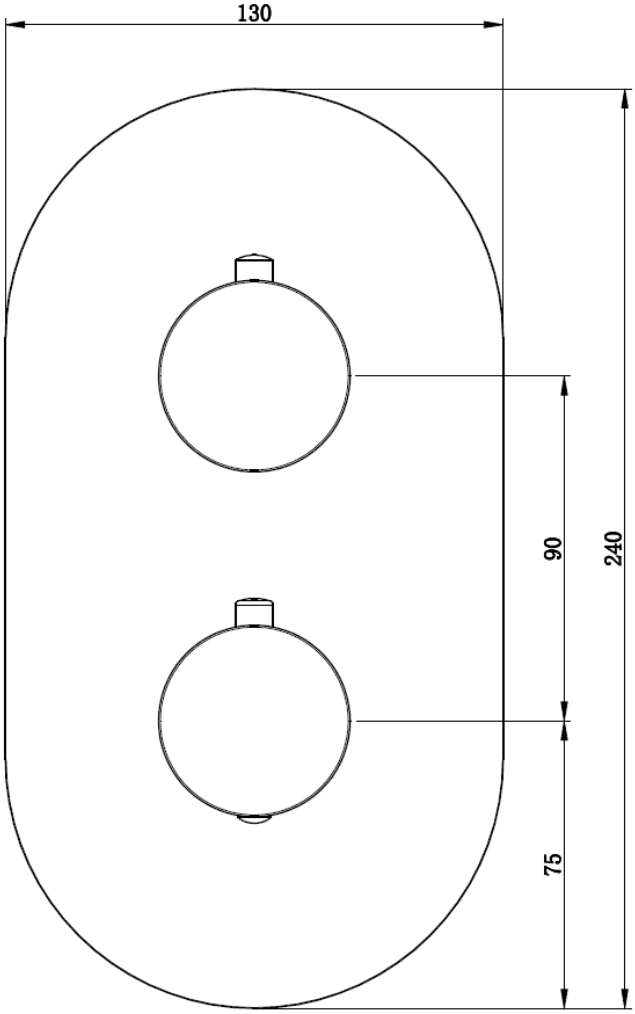
130
90
240
75

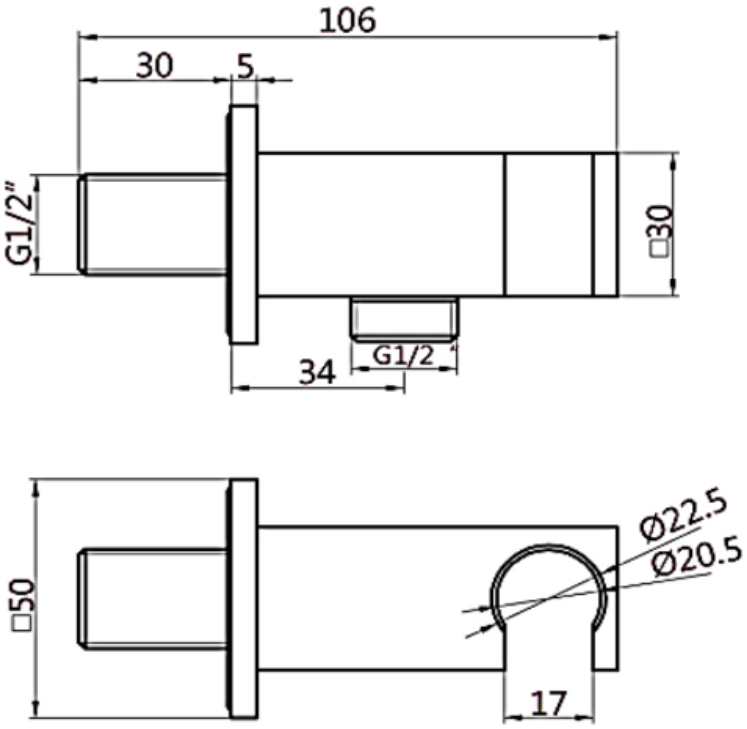
106
30
5
G1/2"
□30
G1/2
34
□50
Ø22.5
Ø20.5
17

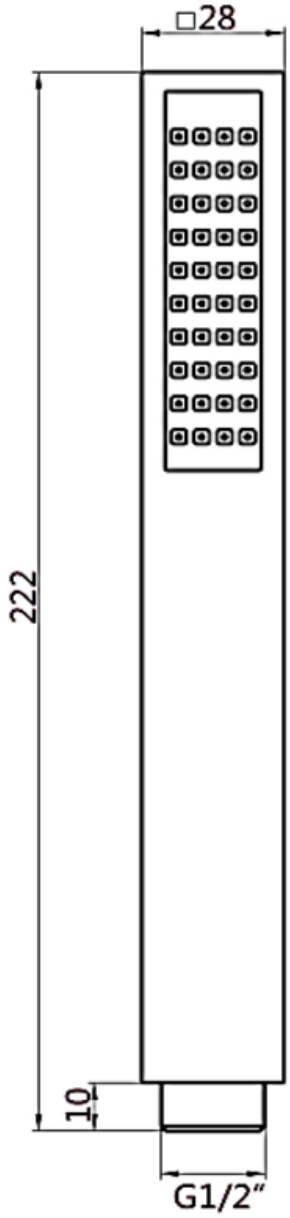
□28
222
10
G1/2"

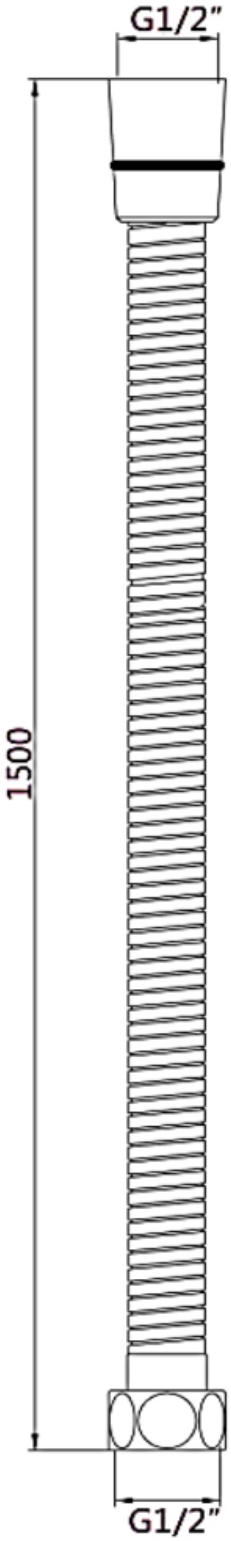
G1/2"
1500
G1/2"

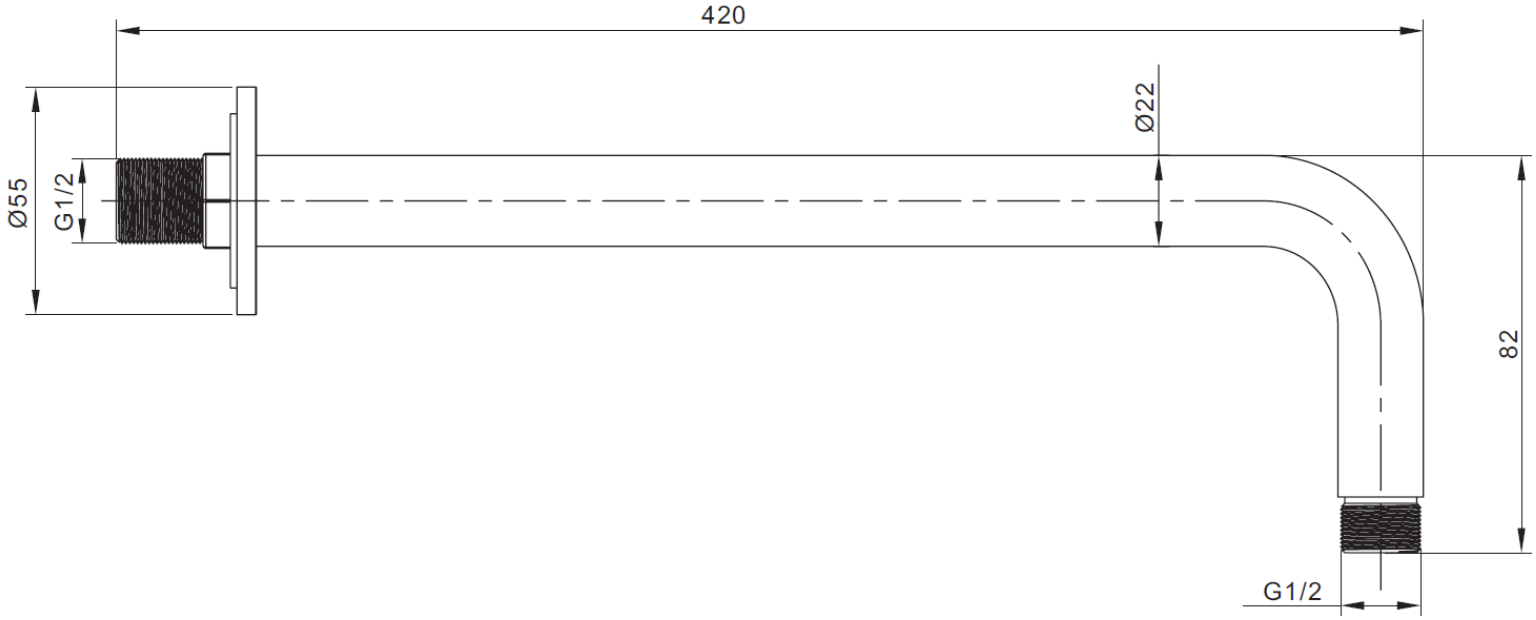
420
Ø22
Ø55
G1/2
82
G1/2

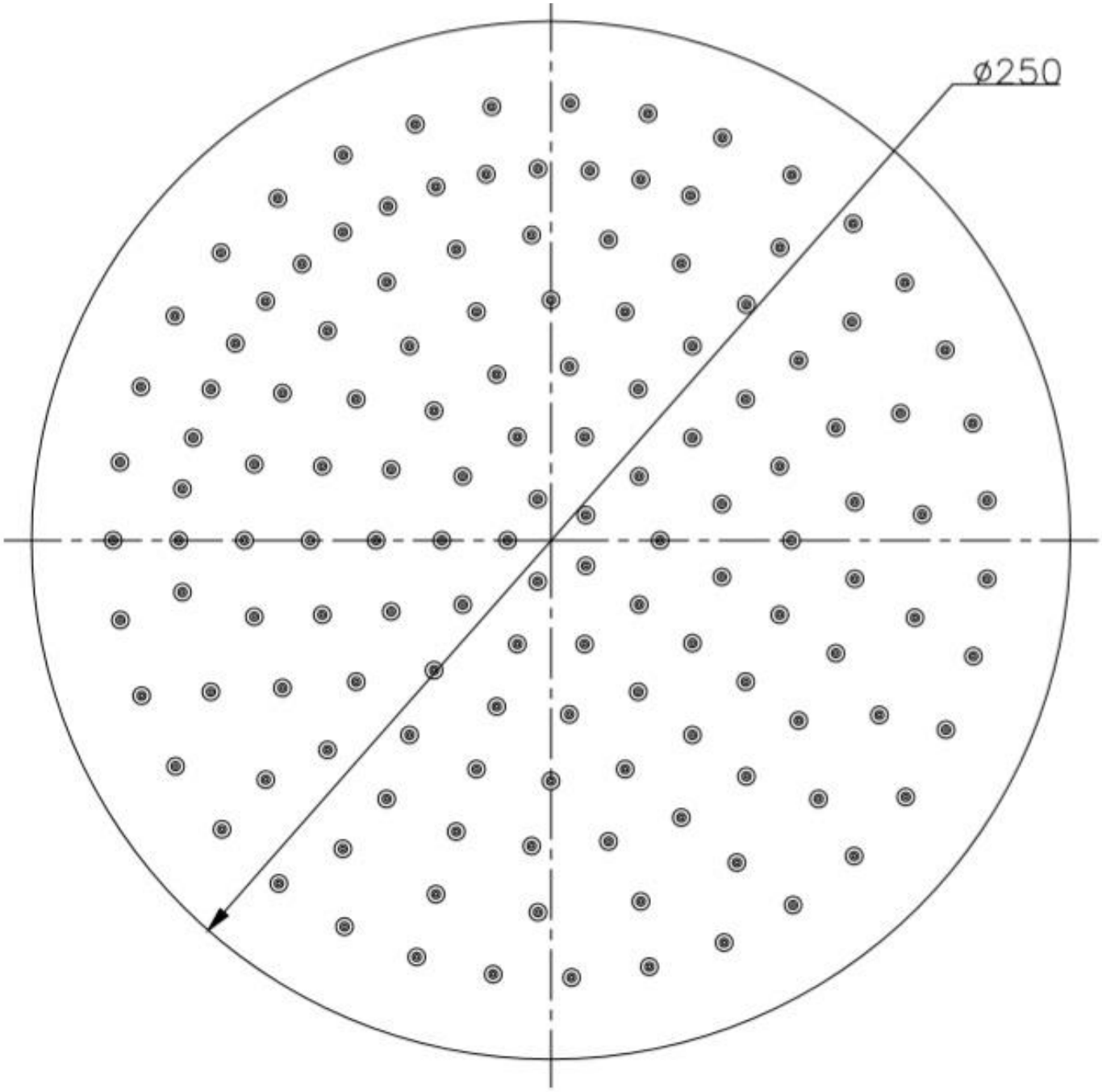
ø250

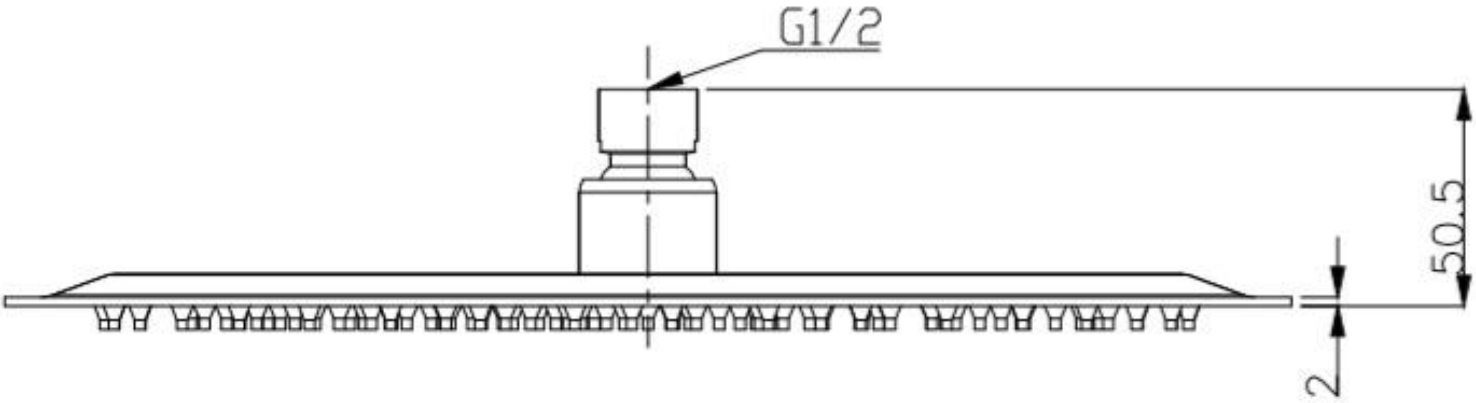
G1/2
50.5
2