SPECIFICATION SHEET

COLLECTION:
PRODUCT CODE: IND-81389/RO-BLK

DESCRIPTION:
push type bath filler waste and overflow
2 x 1/2" inlets
1.1/2" x 10mm threaded outlet connection
min-max overflow bath thickness 1mm-21mm
minimum operating pressure 1.0 bar MP

FINISH:
Brushed Black

MINIMUM OPERATING PRESSURE:
1.0 bar MP

FLOW RATE AT 3.0 BAR FLOW PRESSURE:
42 l/min

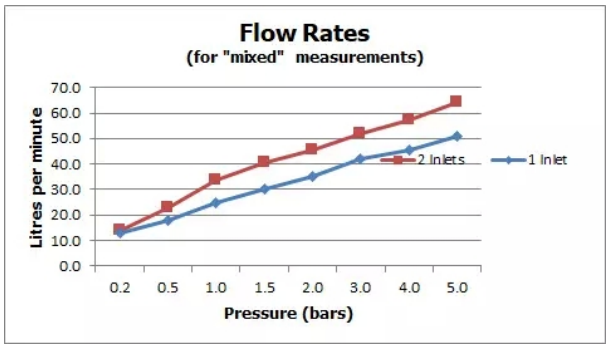

15 year guarantee

tel: 01934 744466
email: sales@vado.com
www.vado.com

where inspiration flows
taps | showering | accessories

VADO

TECHNICAL DRAWING

COLLECTION:
PRODUCT CODE: IND-81389/RO-BLK

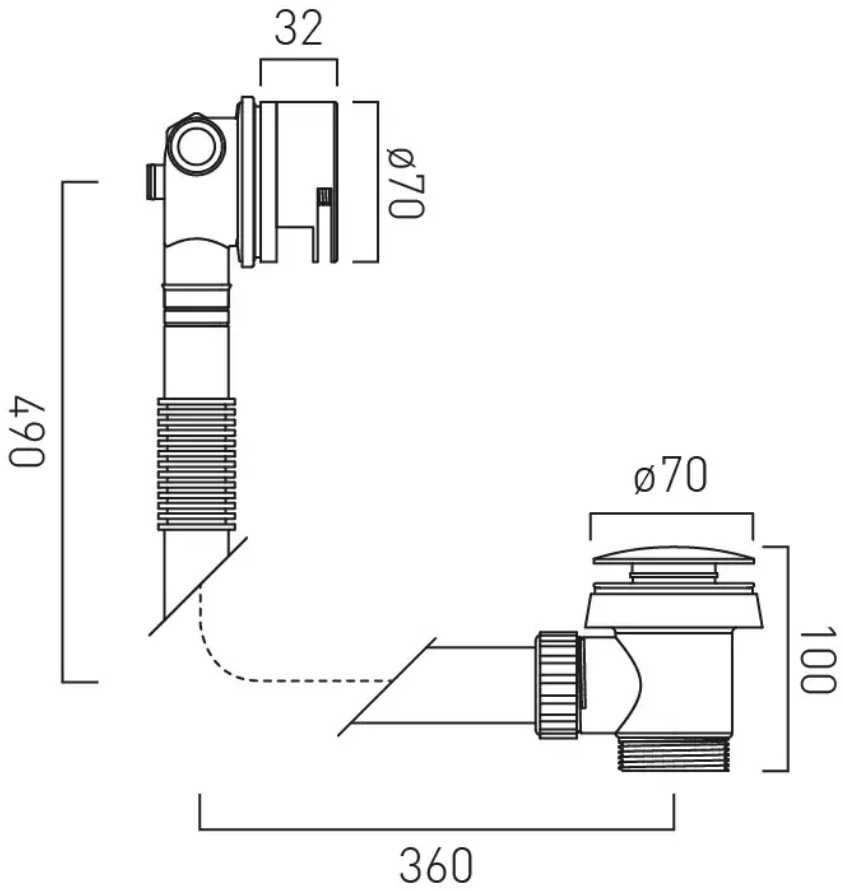

tel: 01934 744466
email: sales@vado.com
www.vado.com

where inspiration flows
taps | showering | accessories

VADO