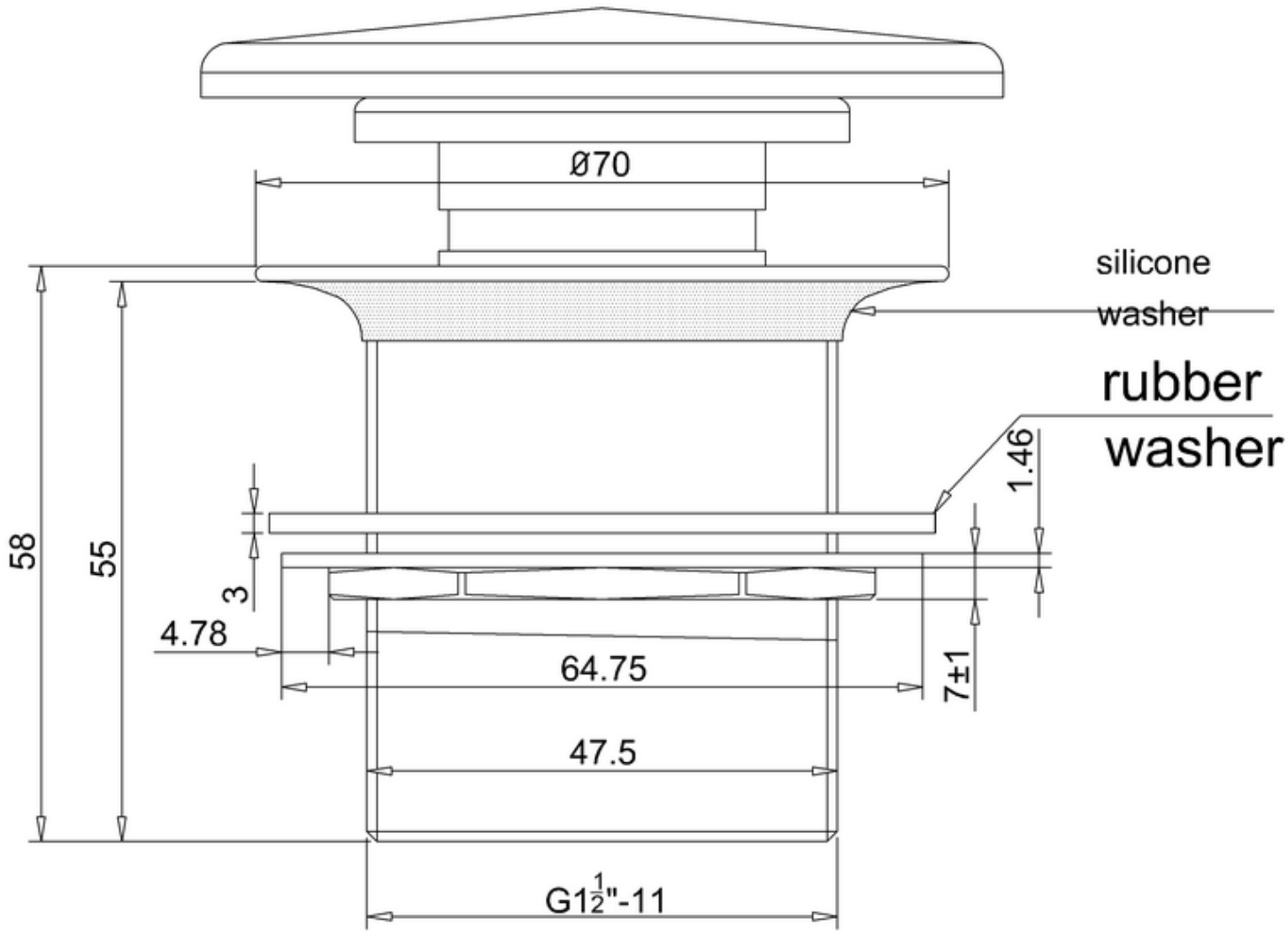
Ø70
silicone
washer
rubber
washer
1.46
58
55
3
4.78
64.75
7±1
47.5
G1½"-11