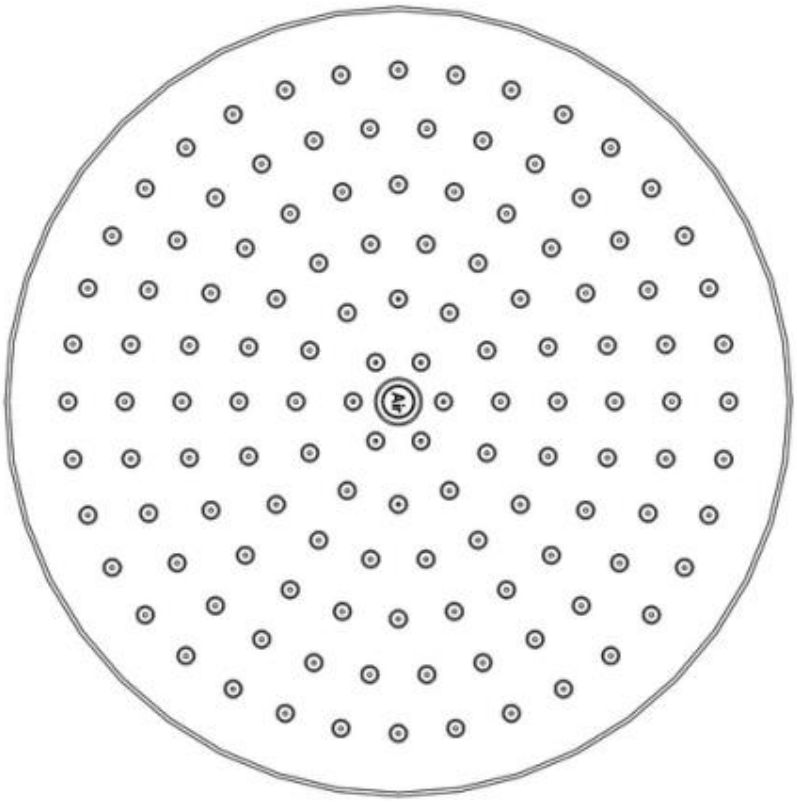

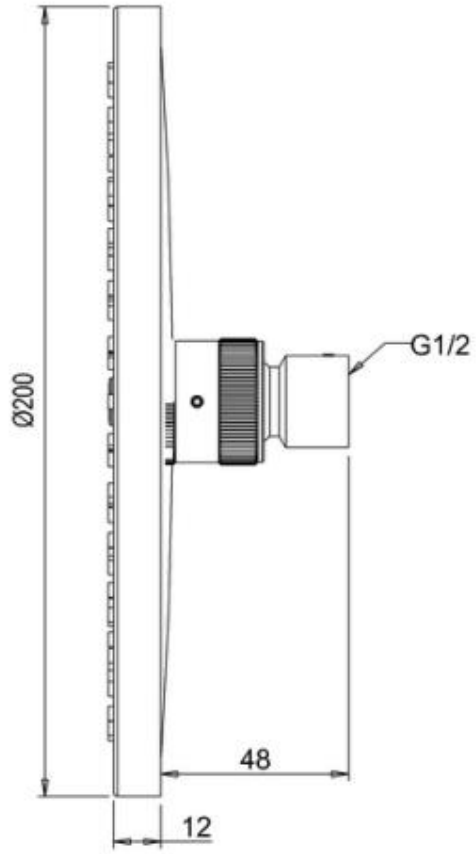
G1/2
Ø200
48
12

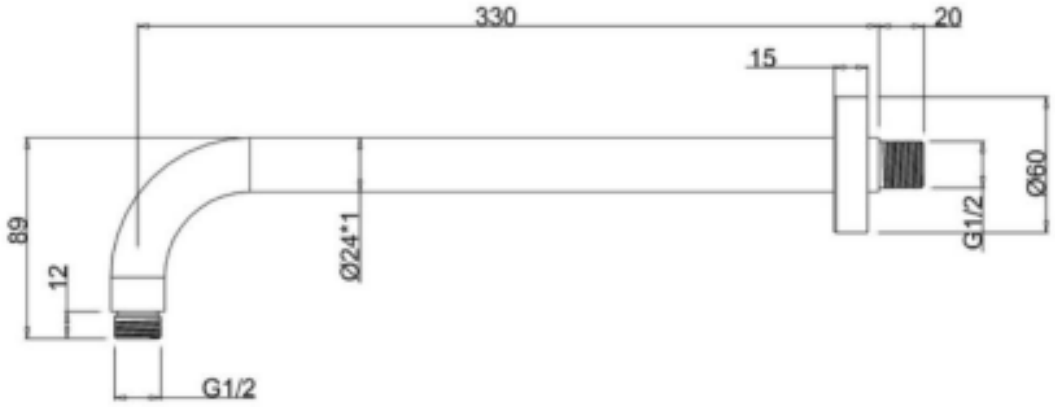
330
20
15
89
12
Ø24*1
G1/2
Ø60
G1/2

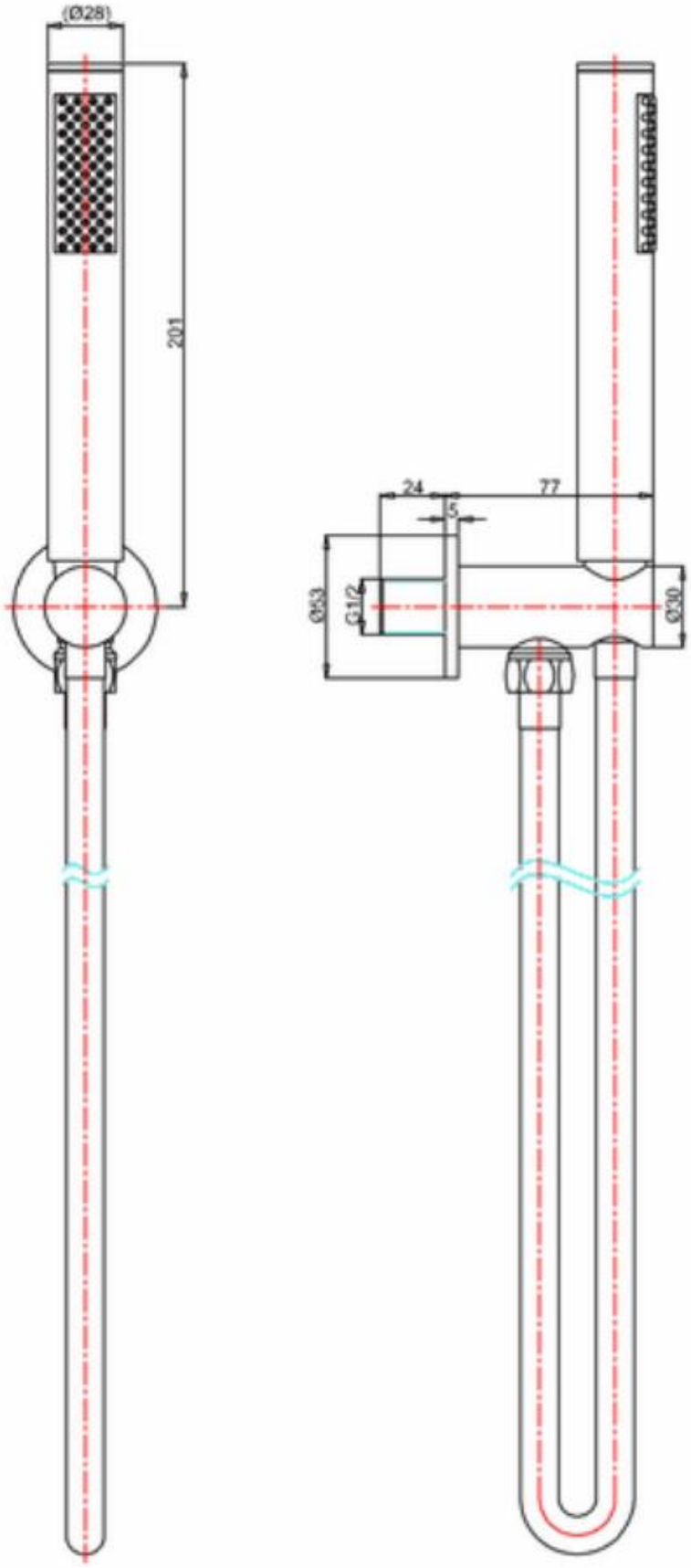
(Ø28)
201
24
77
5
Ø53
G1/2
Ø30

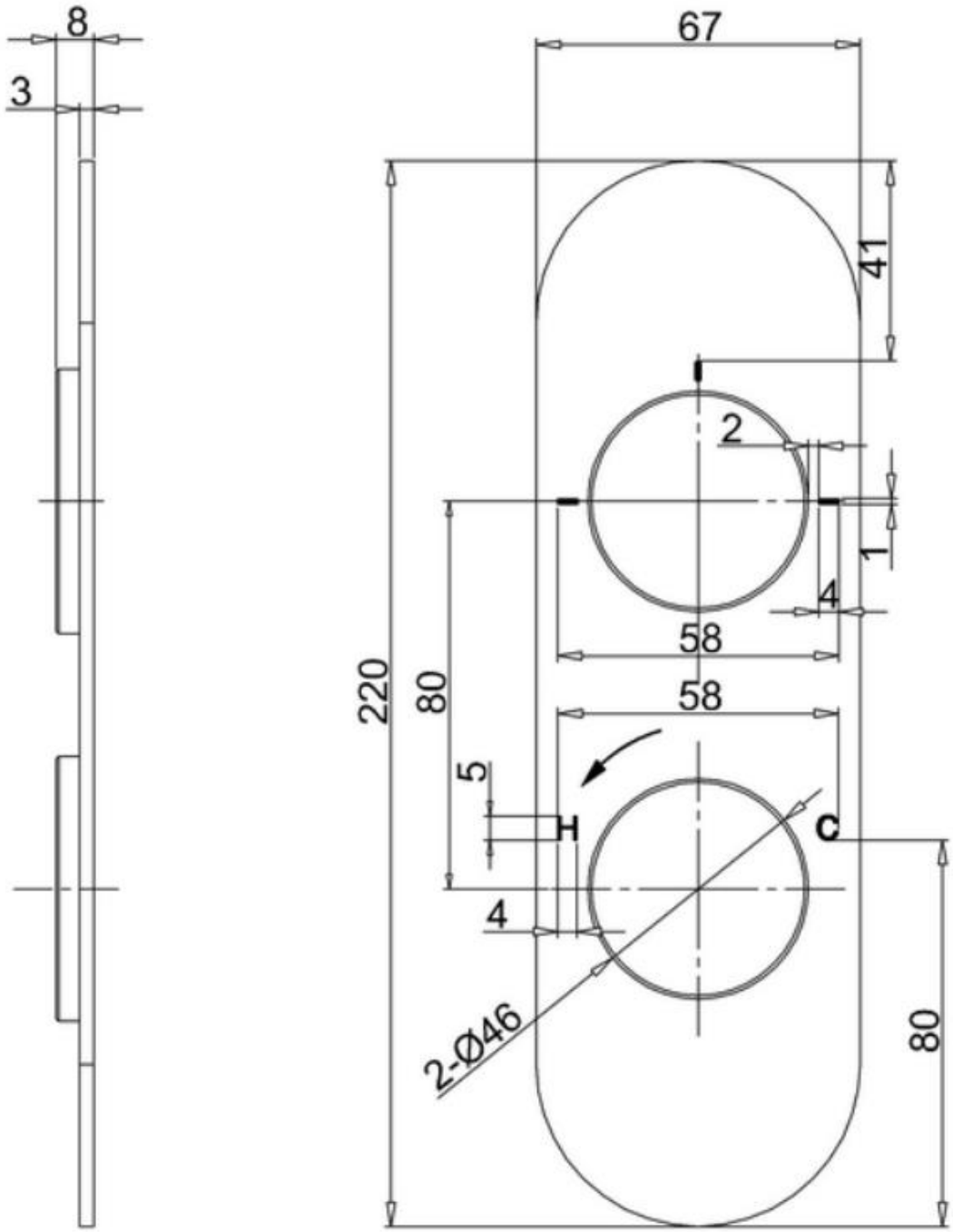
8
3
67
41
2
1
4
58
220
80
58
5
H
C
4
2-Ø46
80