Giorgio Lux Series

Rectangle Shower Tray 1000 x 900mm

tissino

Designed to Inspire
Made to Experience

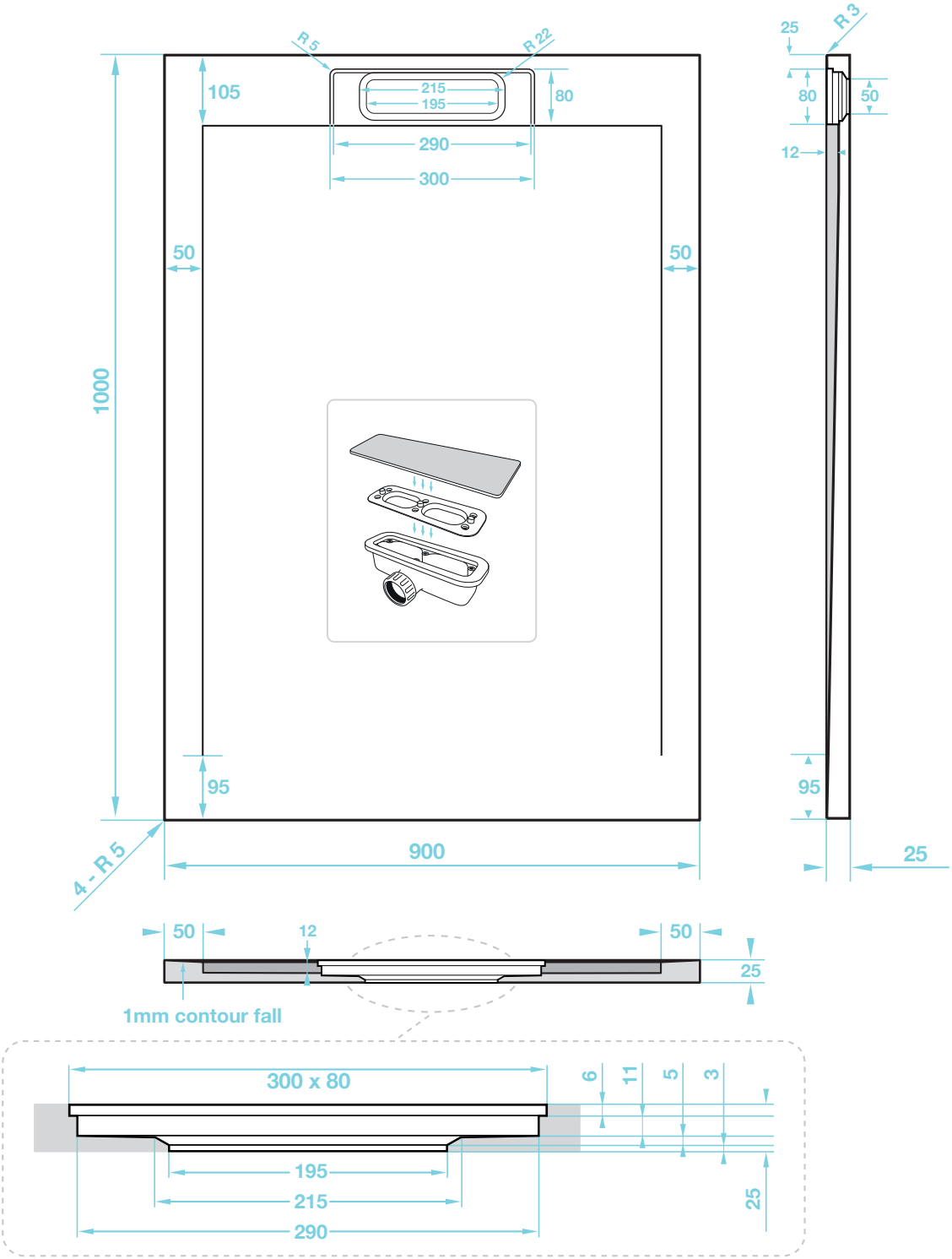

tissino

T 0345 582 8000
E info@tissino.co.uk
W tissino.co.uk

2 Lyncastle Road
Appleton Thorn
Warrington WA4 4SN

We reserve the right to change this information without prior notice

Giorgio Lux Series

Rectangle Shower Tray 1200 x 900mm

tissino

Designed to Inspire
Made to Experience

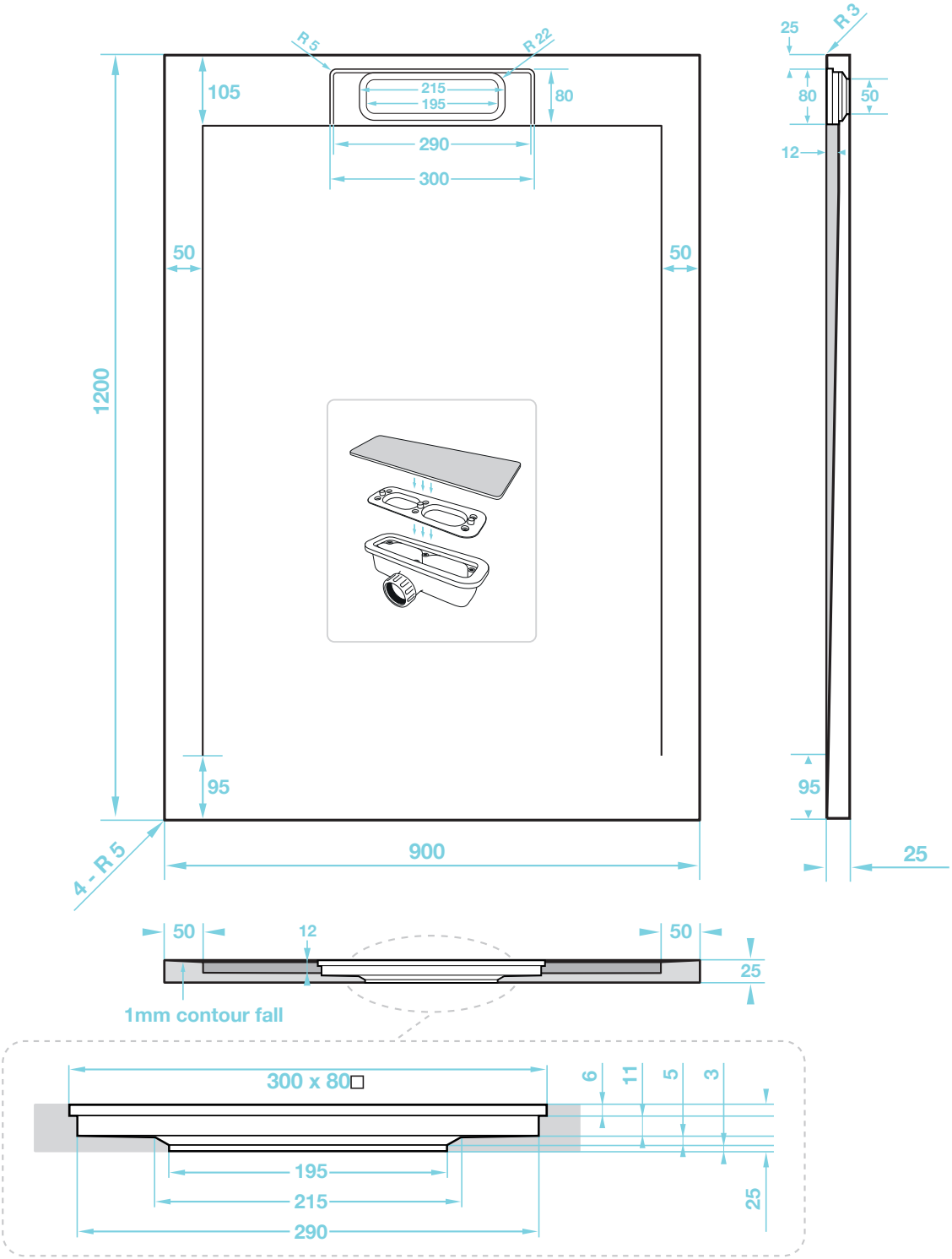

tissino

T 0345 582 8000
E info@tissino.co.uk
W tissino.co.uk

2 Lyncastle Road
Appleton Thorn
Warrington WA4 4SN

We reserve the right to change this information without prior notice

Giorgio Lux Series

Rectangle Shower Tray 1400 x 900mm

tissino

Designed to Inspire
Made to Experience

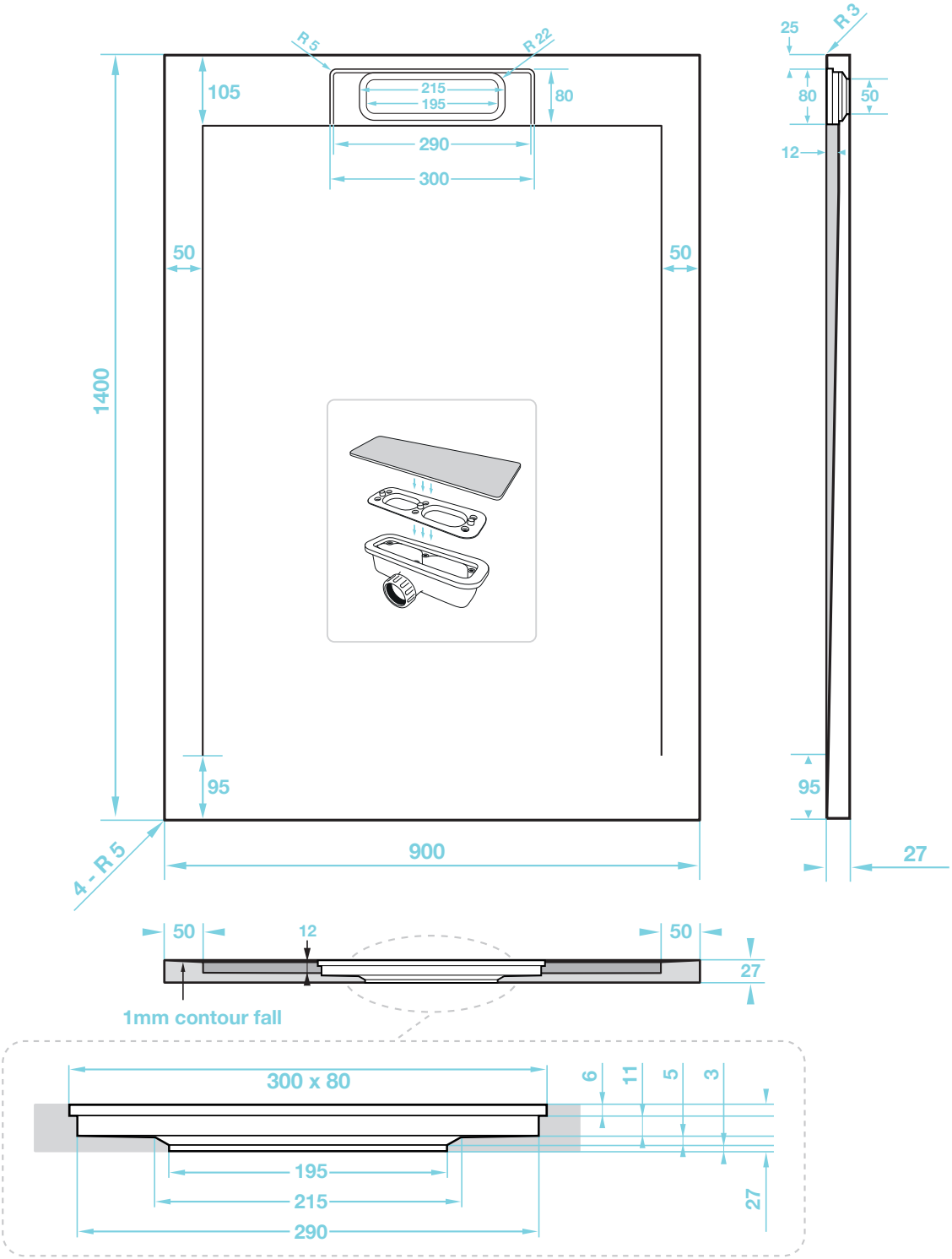

tissino

T 0345 582 8000
E info@tissino.co.uk
W tissino.co.uk

2 Lyncastle Road
Appleton Thorn
Warrington WA4 4SN

We reserve the right to change this information without prior notice

Giorgio Lux Series

Rectangle Shower Tray 1600 x 900mm

tissino

Designed to Inspire
Made to Experience

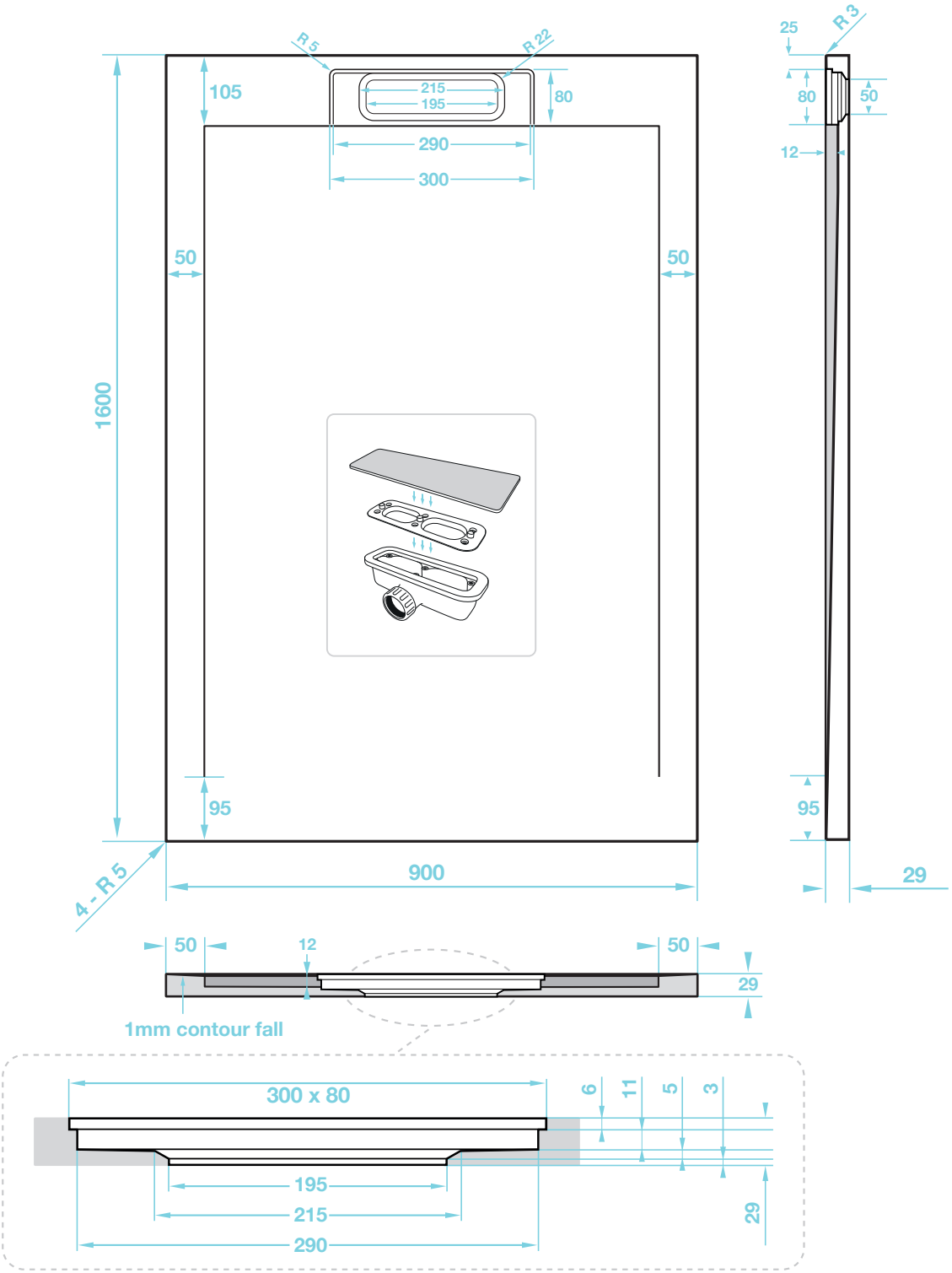

tissino

T 0345 582 8000
E info@tissino.co.uk
W tissino.co.uk

2 Lyncastle Road
Appleton Thorn
Warrington WA4 4SN

We reserve the right to change this information without prior notice

Giorgio Lux Series

Rectangle Shower Tray 1800 x 900mm

tissino

Designed to Inspire
Made to Experience

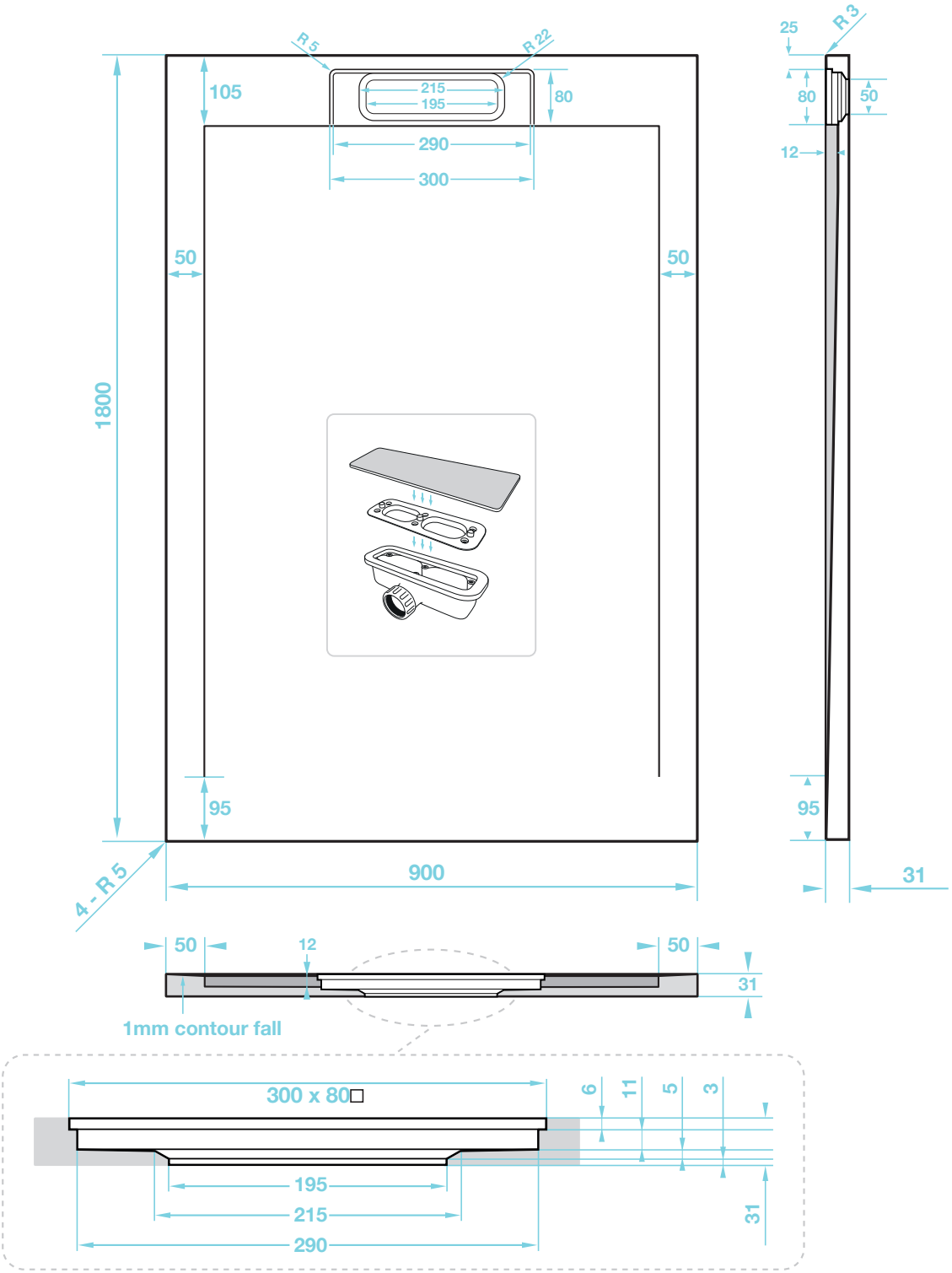

tissino

T 0345 582 8000
E info@tissino.co.uk
W tissino.co.uk

2 Lyncastle Road
Appleton Thorn
Warrington WA4 4SN

We reserve the right to change this information without prior notice

Giorgio Lux Series

Rectangle Shower Tray 2000 x 900mm

tissino

Designed to Inspire
Made to Experience

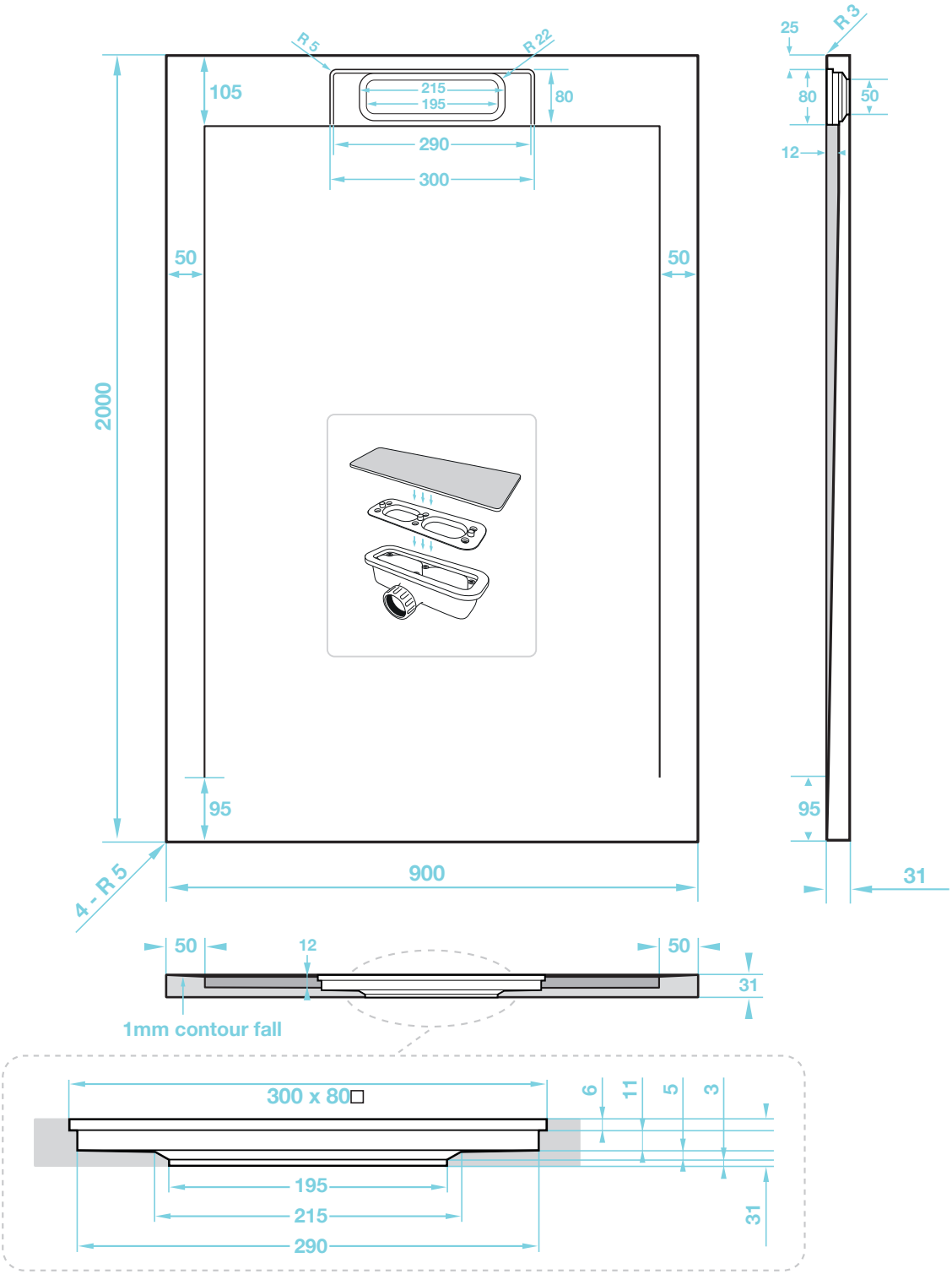

tissino

T 0345 582 8000
E info@tissino.co.uk
W tissino.co.uk

2 Lyncastle Road
Appleton Thorn
Warrington WA4 4SN

We reserve the right to change this information without prior notice